80 CHANNEL NETWORK VIDEO RECORDER

HD-NVR-5648H8-4K

- **80 CH NVR –** 400Mbps Incoming / 400Mbps Outgoing Bandwidth
- **Max Resolution –** 16MP/12MP/8MP/6MP/5MP/4MP/3MP/1080P/ UXGA/720P/VGA/4CIF/DCIF/2CIF/CIF/QCIF
- **Compression –** Smart H.265+ / H.265 / H.264+ / H.264
- **Video Output –** HDMI Upto 4k & VGA up to 1080P
- **Multi Display –** 1/2/3/4/5/6/7/8/9/10/12/13/16/20A/20B/ 25/32/36/40/64/80
- **Playback –** 16 CH Simultaneous Playback
- **Storage –** 8× SATA Up to 24TB HDD Capacity
- **Redundant Power Supply –** Supports Backup Power Redundancy
- **AI by Camera –** Tripwire, Double Tripwire, Perimeter, Object Abandon/Missing, Loitering, Face Detection, Running, Parking, Crowd Detection etc.
- **AI by NVR -** Face Detection/ Recognition, Video Structuralization, Tripwire, Double Tripwire, Running, Parking, Heatmap etc.

80 CH NVR MULTI RECORDING | 16 MP MAX RESOLUTION | 8 SATA SLOT UPTO 24TB | INCOMING/OUTGOING BANDWIDTH | AI FEATURES

SYSTEM OVERVIEW

Supports up to 80 Channels with high 400Mbps bandwidth for ultra-large, high-performance surveillance systems.
Delivers crystal-clear imaging up to 16MP with powerful decoding for smooth live view and playback across multiple streams.
Advanced AI capabilities including face recognition, perimeter protection, human attributes, and intelligent behavior analysis.
Massive storage support with up to 8 SATA drives and RAID ensures secure, scalable, and reliable data management.
Built for enterprise deployments with dual HDMI output, multi-screen display, and robust networking for maximum efficiency.

ABOUT HIFOCUS

HI-FOCUS is a trusted leader in surveillance and networking solutions with more than a **Decade of experience** in CCTV Industry. We deliver innovative, reliable, and high-performance security products designed to meet global quality standards. Every HI-FOCUS product is engineered with precision and rigorously tested to ensure superior performance and customer satisfaction.

Design and specifications are subject to change without notice. Visit HiFocusCctv.com for the latest product information /specification.

Instant Access to Your Security
Remote Access Anywhere
Replay Important Evidence

Flexible HDMI & VGA Connectivity
High-resolution output for sharper, clearer images

Central Monitoring System
Monitor Multiple Locations from One Powerful Platform

ONVIF Compatibility
Supports ONVIF for easy integration with IP cameros and NVR
MULTIPLE IP CAMERA SUPPORT
SMART STORAGE MANAGEMENT
SMART STORAGE MANAGEMENT
ADVANCED ANALYTICS
SEAMLESS CLOUD INTEGRATION

P2P Cloud Connectivity
Access your security system globally with unmatched ease and reliability.
CLOUD-BASED NVR SYSTEM
P2P NETWORK
SECURE CLOUD STORAGE
REAL-TIME SYNC
MOBILE APP VIEW ANYWHERE

80CH REDUNDANT POWER SUPPLY NVR
MAXIMUM RELIABILITY. ZERO COMPROMISE.
Hi-Focus 80CH Redundant Power Supply NVR delivers uninterrupted performance and maximum reliability.
80 CHANNEL RECORDING
ZERO DOWNTIME PROTECTION
DUAL REDUNDANT POWER SUPPLY
HOT-SWAPPABLE PSU DESIGN
AI POWERED ANALYTICS
HIGH CAPACITY STORAGE
DUAL REDUNDANT POWER SUPPLY
AUTO FAILOVER ZERO DOWNTIME
ENGINEERED FOR ENTERPRISE SURVEILLANCE
BUILT FOR MISSION-CRITICAL SURVEILLANCE
UP TO 16MP
H.265
16 CHANNEL PLAYBACK
REMOTE ACCESS
ONVIF
GIGABIT
24×7
HI-FOCUS NVR
RELIABILITY YOU CAN TRUST. SECURITY YOU CAN DEPEND ON.

Design and specifications are subject to change without notice. Visit HiFocusCctv.com for the latest product information /specification.

80 CHANNEL NETWORK VIDEO RECORDER | HD-NVR-5648H8-4K

Video & Audio

NVR supports 80 channels with 400 Mbps bandwidth, reduced when AI is enabled. It handles resolutions from 16MP to QCIF and high-frame decoding. Audio includes 1 input, 1 output, and 2-way audio, supporting video & audio streams.

Alarm & Exception Handling

Alarms include motion, mask detection, and IPC/NVR triggers. Exception notifications cover video loss, network errors, disk errors, IP/MAC conflicts. Alarm interface has 16 inputs and 4 outputs for extensive integration.

Intelligent Analytics

AI features detect tripwire, perimeter, object abandon/missing, people counting, loitering, and more. Camera and NVR AI algorithms include face detection, human body temperature, safety helmet, and smoke/fire detection. AI performance varies; dual 4K output and NVR AI algorithms are mutually exclusive.

Face Recognition

Supports detection of gender, age, glasses, mask, and body temperature. Up to 20 face libraries and 100,000 base images can be stored. Performance includes 8-channel 1080P video streams or 32-channel image streams.

Storage & RAID

Supports 8 SATA ports, up to 24 TB per HDD. RAID options include JBOD, RAID0/1/5/6/10/50/60. Allows secure, scalable storage for large surveillance deployments.

Interfaces

Includes 1 eSATA, 2 USB2.0, 1 USB3.0, 2 RJ-45, 1 RS-232, 2 RS-485 ports. Supports additional devices, storage, and network integration. Flexible connections for system expansion and peripheral support.

Design and specifications are subject to change without notice. Visit HiFocusCctv.com for the latest product information /specification.

CORE FEATURES

Video and Audio

Channel	80
Incoming Bandwidth	400Mbps(AI on: 320Mbps)
Outgoing Bandwidth	400Mbps(AI on: 200Mbps)
Resolution	16MP/12MP/8MP/6MP/5MP/ 4MP/3MP/1080P/UXGA/720P/ VGA/4CIF/DCIF/2CIF/CIF/ QCIF
Preview Decoding Capability	16MP(30fps)×3, 12MP(30fps)×4, 8MP(30fps)×7, 6MP(30fps)×9, 5MP(30fps)×11, 4MP(30fps)×14, 3MP(30fps)×18, 1080P(30fps)×28, 720P(30fps)×80, 4CIF (30fps)×80 (AI on:16MP(30fps) ×2, 12MP(30fps)×3, 8MP(30fps) ×5, 6MP(30fps)×6, 5MP(30fps) ×8, 4MP(30fps)×10, 3MP(30fps) ×13, 1080P(30fps)×20, 720P (30fps)×40)
Playback Decoding Capability	16MP(30fps)×3, 12MP(30fps)×4, 8MP(30fps)×7, 6MP(30fps)×9, 5MP(30fps)×11, 4MP(30fps)×14, 3MP(30fps)×16, 1080P(30fps)×16, 720P(30fps)×16, 4CIF(30fps)×16 (AI on:16MP(30fps)×2, 12MP (30fps)×3, 8MP(30fps)×5, 6MP (30fps)×6, 5MP(30fps)×8, 4MP (30fps)×10, 3MP(30fps)×13, 1080P(30fps)×16, 720P(30fps)×16)
Compatibility	ONVIF(Profile S/T/G), CGI, SDK, P2P
HDMI Output	HDMI: 800×600(60Hz), 1024×768(60Hz), 1280×720 (50Hz/60Hz), 1280×800(60Hz), 1280×1024(60Hz), 1366×768 (60Hz), 1440×900(60Hz), 1920×1080(50Hz/60Hz), 2560×1440(30Hz/60Hz), 2560×1600(60Hz), (4K) 3840×2160(30Hz/60Hz)
VGA Output	VGA: 800×600(60Hz), 1024×768 (60Hz), 1280×720(50Hz/60Hz), 1280×800(60Hz), 1280×1024 (60Hz), 1366×768(60Hz), 1440×900(60Hz), 1920×1080 (50Hz/60Hz)
Multi-screen Display	HDMI 1/VGA1: 1/2A/2B/3/4/5/6/7/8/9/10/12/13/16/ 20A/20B/25/32/36/40/64/80 HDMI2/VGA2: 1/2A/2B/3/4/5/6/7/8/9/10/12/13/16/ 20A/20B/25/32/36/40/64/80
Audio Input	1CH
Audio Output	1CH
Two-Way Audio	1CH

Compression Standard

Video Compression	Smart H.265+, H.265, Smart H.264+, H.264
Audio Compression	G.711A, G.711U, AAC, ADPCM_D
Stream Type	Video, Video & Audio

Network

Network Protocol	802.1X, ARP, DDNS, DHCP, DNS, Easy DDNS, FTP, HTTP, HTTPS, ICMP, IGMP, IPv4, IPv6, Multicast, NFS, NTP, PPPoE, QoS, RTCP, RTP, RTSP, SMB/ CIFS, SMTP, SNMP v1/v2/v3, SRTP, SSH, SSL, TLSv1.2, TCP, UDP, Unicast, UPnP
Moblie Client	Android, iOS
System Compatibility	ONVIF(Profile S/T/G), RTSP, CGI, SDK, P2P
Web	IE10+, Firefox52+, Edge89+, Safari11+, Chrome57+

Recording

Multi-channel Playback	16
Record Mode	Manual Recording, Alarm Recording, Schedule Recording
Storage Method	Local HDD, eSATA
Backup	USB storage device, eSATA, Network
Playback Function	Play/Pause/Stop/Reverse/ Slow/Speed/Backwards 30s/ Forwards 30s/Full Screen/ Backup (Video Editing)/Step/ Digital Zoom/Instant Replay

Design and specifications are subject to change without notice. Visit HiFocusCctv.com for the latest product information /specification.

Dual Stream Record	Yes

Alarm

General Alarm	Motion Detection, Mask Alarm, Alarm Input(IPC), Alarm Input (NVR)
Exception Notification	Video Loss, Network Disconnected, No Disk, Illegal Access, Disk group space alert, Disk Full, Disk R/W Error, Recording Abnormal, Abnormal found in smart of disk, Abnormal temperature of the disk, Hot-spare Exception, Array Exception, Voltage Alarm(IPC), RTC Failure, IP Address Conflict, MAC Address Conflict, Disk Overload
Alarm I/O	16CH IN / 4CH OUT

Intelligent Analytics

AI by Camera	Tripwire, Double Tripwire, Perimeter, Object Abandon, Object Missing, Running, Parking, Heatmap, Loitering, Video Abnormal, Audio Abnormal, On Duty Detection, Crowd Detection, Safety Helmet Detection, Electric Bicycle Detection, People Counting, Link to Tracking, Smoke and Fire Detection, Environmental Temperature Measurement, Face Detection, Human Body Temperature Measurement, Smart Alarm, Face Recognition, Human/Vehicle Classification
AI by NVR	Face Detection, Face Recognition, Video Structuralization (excludes vehicle detection), Tripwire, Double Tripwire, Perimeter, Object Abandon, Object Missing, Running, Parking, Heatmap, Sleeping on Duty Detection, On Duty Detection, Smart Motion Detection, Loitering, *: NVR AI algorithms and dual 4K output are mutually exclusive., People Counting
VCA Search	Face Detection, Face Recognition, Video Structuralization (excludes vehicle detection), Tripwire, DoubleTripwire, Perimeter, Object Abandon, Object Missing, Running, Parking, Heatmap, Sleeping on Duty Detection, On Duty Detection, Smart Motion Detection, Loitering: NVR AI algorithms and dual 4Koutput are mutually exclusive., People Counting
VCA Report	Heatmap, People Counting, Face Statistics

Design and specifications are subject to change without notice. Visit HiFocusCctv.com for the latest product information /specification.

Face Recognition

Face Attributes Detection	Gender, Age, Glasses, Face Mask
Face Attributes Search	Gender, Age, Glasses, Face Mask, Body Temp
Face Recognition Performance	8-ch(1080P) video streams or 32-ch image streams
Face Picture Library	Up to 20 face libraries Up to 100000 base images
Face Picture Comparison	Supported
Video Structuralization Performance	8-ch(1080P) (excludes vehicle detection)
Human Attributes Detection	Gender, Age, Backpack, Face Mask, Glasses, Hair, Carrying Status, Top Color, Bottom Color, Top Type, Bottom Type, Riding Status, Hat
Human Attributes Search	Gender, Age, Backpack, Face Mask, Glasses, Hair, Carrying Status, Top Color, Bottom Color, Top Type, Bottom Type, Riding Status, Hat

AI Performance(AI by NVR)

Perimeter/Tripwire Performance	24CH
Object Abandon/Missing Performance	8CH (1080P)
Sleeping on Duty Performance	8CH (1080P)
On Duty Performance	8CH (1080P)
Loitering/Running Performance	8CH (1080P)
Parking Performance	8CH (1080P)
Heatmap Performance	8CH (1080P)
Smart Motion Dection Performance	32CH
People Counting Performance	8CH (1080P)

Design and specifications are subject to change without notice. Visit HiFocusCctv.com for the latest product information /specification.

Storage

Hard Disk Capacity	8 SATA up to 24 TB capacity for each HDD
RAID	JBOD, RAID0, RAID1, RAID5, RAID6, RAID10, RAID50, RAID60

INTERFACE

eSATA	1×eSATA
USB	2×USB2.0, 1×USB3.0
Network Interface	2×RJ-45, 10/100/1000 Mbps self-adaptive Ethernet port
RS-232	1×RS-232
RS-485	2×RS-485

General

Power Supply	100~240V AC
Redundant Power Supply	Supported
Power Consumption	≤18W (HDD not included)
NetWeight	6.2Kg
GrossWeight	8.4Kg
Boundary Dimensions	440(L) 455(W) 94(H) mm
Package Dimensions	565(L) 565(W) 220(H)mm
Operating Temperature	-10°C~+55°C (+14°F~+131 F)
Operating Humidity	10%~90%RH (non-condensing)
Storage Temperature	-20°C~+60°C (-4 F~+140°F)

Design and specifications are subject to change without notice. Visit HiFocusCctv.com for the latest product information /specification.
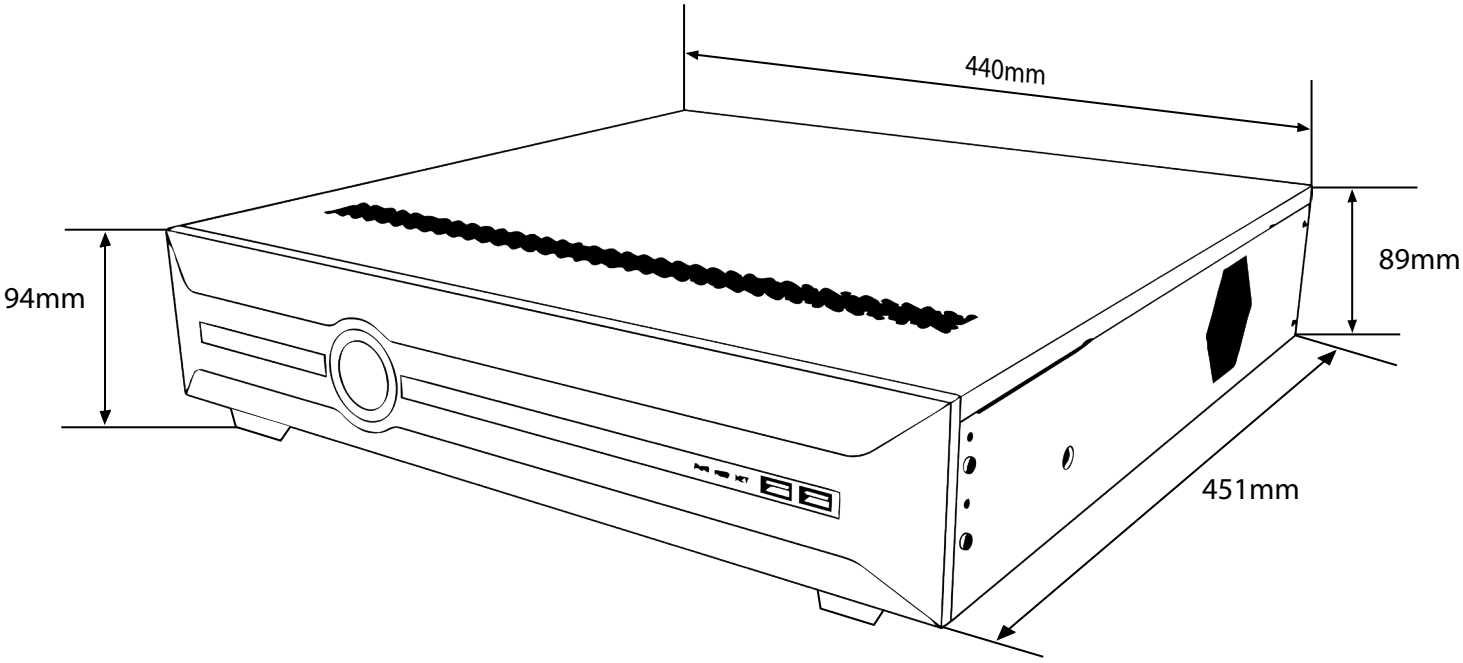
Dimensions