20 CHANNEL NETWORK VIDEO RECORDER

HD-NVR-5120I

- **20 CH NVR –** 100Mbps Incoming / 80Mbps Outgoing Bandwidth
- **Max Resolution –** 8MP/6MP/5MP/4MP/3MP/1080P/UXGA/720P/VGA/4CIF/DCIF/2CIF/CIF/QCIF
- **Compression –** Smart H.265+ / H.265 / H.264+ / H.264
- **Video Output –** HDMI Upto 4K & VGA up to 1080P
- **Multi Display –** 1/2A/2B/3/4/5/6/7/8/9/10/12/13/16/20A/20B/20C/20D/25
- **Playback –** 16 CH Simultaneous Playback
- **Storage –** 1× SATA Up to 10TB HDD Capacity
- **AI by Camera –** Tripwire, Double Tripwire, Perimeter, Object Abandon/Missing, Loitering, Running, Parking, Crowd Detection etc.

20 CH NVR MULTI RECORDING | 8 MP MAX RESOLUTION | 1 SATA SLOT UPTO 10TB | INCOMING/OUTGOING BANDWIDTH | AI FEATURES

SYSTEM OVERVIEW

20 Channel NVR supports up to 8MP high-resolution recording with optimized bandwidth and smart compression. With HDMI output up to 4K and VGA support, it enables flexible multi-screen display options. Supports up to 16-channel playback for smooth monitoring and efficient video management. Offers wide compatibility with ONVIF, P2P, and multiple network protocols for seamless integration. Advanced AI by camera enables intelligent detection and enhanced surveillance performance.

ABOUT HIFOCUS

HI-FOCUS is a trusted leader in surveillance and networking solutions with more than a **Decade of experience** in CCTV Industry. We deliver innovative, reliable, and high-performance security products designed to meet global quality standards. Every HI-FOCUS product is engineered with precision and rigorously tested to ensure superior performance and customer satisfaction.

Design and specifications are subject to change without notice. Visit HiFocusCctv.com for the latest product information /specification.

Design and specifications are subject to change without notice. Visit HiFocusCctv.com for the latest product information /specification.

20 CHANNEL NETWORK VIDEO RECORDER | HD-NVR-5120I

Video and Audio

20 Channel NVR supports high-resolution video from 8MP to QCIF, with an incoming bandwidth of 100 Mbps and outgoing bandwidth of 80 Mbps. It offers strong preview and playback decoding capabilities at various frame rates, ensuring smooth, high-quality video monitoring.

Display and Compatibility

The device supports HDMI output up to 4K (3840×2160@30Hz) and VGA output up to 1080P, with multi-screen display options for up to 25 simultaneous outputs on both VGA and HDMI. It is compatible with ONVIF (Profile S/T/G), CGI, SDK, and P2P for extensive third-party camera integration.

Intelligent Analytics

Features advanced AI analytics including tripwire, perimeter, crowd detection, safety helmet detection, smoke and fire detection, and human/vehicle classification. Offers detailed VCA search options like behavior, face, and thermographic retrieval.

Face Recognition

Supports face attribute searches by gender, age, glasses, mask usage, and body temperature, improving security through intelligent identification and monitoring.

Storage and Interface

Supports one SATA HDD port with up to 10TB capacity, 2 USB 2.0 ports for storage or backups, and a self-adaptive 10/100 Mbps Ethernet network interface.

Design and specifications are subject to change without notice. Visit HiFocusCctv.com for the latest product information /specification.

CORE FEATURES

Video and Audio

Channel	20
Incoming Bandwidth	100Mbps
Outgoing Bandwidth	80Mbps
Resolution	8MP/6MP/5MP/4MP/3MP/ 1080P/UXGA/720P/VGA/4CIF/ DCIF/2CIF/CIF/QCIF
Preview Decoding Capability	8MP(30fps)×2, 6MP(30fps)×2, 5MP(30fps)×3, 4MP(30fps)×4, 3MP(30fps)×5, 1080P(30fps)×8, 720P(30fps)×16, 4CIF(30fps)×20
Playback Decoding Capability	8MP(30fps)×2, 6MP(30fps)×2, 5MP(30fps)×3, 4MP(30fps)×4, 3MP(30fps)×5, 1080P(30fps)×8, 720P(30fps)×16, 4CIF(30fps)×16
Compatibility	ONVIF(Profile S/T/G), CGI, SDK, P2P
HDMI Output	HDMI: 1024×768(60Hz), (720P) 1280×720(50Hz/60Hz), 1280×800(60Hz), 1280×1024 (60Hz), 1440×900(60Hz), (1080P)1920×1080(50Hz/60Hz), (2K)2560×1440(30Hz), (4K)3840×2160(30Hz)
VGA Output	VGA: 1024×768(60Hz), (720P) 1280×720(50Hz/60Hz), 1280×800(60Hz), 1280×1024 (60Hz),1440×900(60Hz), (1080P)1920×1080(50Hz/60Hz)
Multi-screen Display	Simultaneous Output: VGA: 1/2A/2B/3/4/5/6/7/8/9/10/ 12/13/16/20A/20B/20C/20D/25 HDMI: 1/2A/2B/3/4/5/6/7/8/9/10/ 12/13/16/20A/20B/20C/20D/25
Audio Output	1CH

Compression Standard

Video Compression	Smart H.265+, H.265, Smart H.264, H.264
Audio Compression	G.711A, G.711U, AAC, ADPCM_D
Stream Type	Video, Video & Audio

Network

Network Protocol	802.1X, ARP, DDNS, DHCP, DNS, Easy DDNS, FTP, HTTP, HTTPS, ICMP, IGMP, IPv4, IPv6, Multicast, NFS, NTP, PPPoE, QoS, RTCP, RTP, RTSP, SMB/CIFS, SMTP, SNMP v1/v2/v3, SRTP, SSH, SSL, TLSv1.2, TCP, UDP, Unicast, UPnP
Moblie Client	Android, iOS
Web	IE10+, Firefox52+, Edge89+, Safari11+, Chrome57+

Recording

Multi-channel Playback	16
Record Mode	Manual Recording, Alarm Recording, Schedule Recording
Storage Method	Local HDD
Backup	USB storage device, Network
Playback Function	Play/Pause/Stop/Reverse/ Slow/Speed/Backwards 30s/ Forwards 30s/Full Screen/ Backup (Video Editing)/ Step/Digital Zoom/ Instant Replay
Dual Stream Record	Supported

Alarm

General Alarm	Motion Detection, Mask Alarm, Alarm Input(IPC)
Exception Notification	Video Loss, Network Disconnected, No Disk, Illegal Access, Disk group space alert, Disk Full, Disk R/W Error, Recording Abnormal, Abnormal found in smart of disk, Abnormal temperature of the disk, Hot-spare Exception, Voltage Alarm (IPC), RTC Failure, IP Address Conflict, MAC Address Conflict, Disk Overload

Design and specifications are subject to change without notice. Visit HiFocusCctv.com for the latest product information /specification.

Intelligent Analytics

AI by Camera	Tripwire, Double Tripwire, Perimeter, Object Abandon, Object Missing, Running, Parking, Heatmap, Loitering, Video Abnormal, Audio Abnormal, On Duty Detection, Crowd Detection, Safety Helmet Detection, Electric Bicycle Detection, People Counting, Link to Tracking, Smoke and Fire Detection, Environmental Temperature Measurement, Face Detection, Human Body Temperature Measurement, Smart Alarm, Human/Vehicle Classification
VCA Search	Early-warning Search, Behavior Search, Safety Helmet Search, Thermographic Retrieval, Duty Search, Electric Bicycle Retrieval, Face Search
VCA Report	Heatmap, People Counting, Face Statistics

Face Recognition

Face Attributes Search	Gender, Age, Glasses, Face Mask, Body Temp.

Storage

Hard Disk Capacity	1×SATA Up to 10 TB capacity for each HDD

INTERFACE

USB	2×USB2.0
Network Interface	1×RJ-45, 10/100 Mbps self-adaptive Ethernet port

General

Power Supply	DC12V
Power Consumption	<10W (HDD not included)
NetWeight	0.8kg
GrossWeight	1.43kg
Boundary Dimensions	250(L)229(W)45(H)mm
Package Dimensions	385(L)80(W)280(H)mm
Operating Temperature	-10°C~+55°C (+14°F~+131°F)
Operating Humidity	10%~90%RH (non-condensing)
Storage Temperature	-20°C~+60°C (-4°F~+140°F)

Design and specifications are subject to change without notice. Visit HiFocusCctv.com for the latest product information /specification.
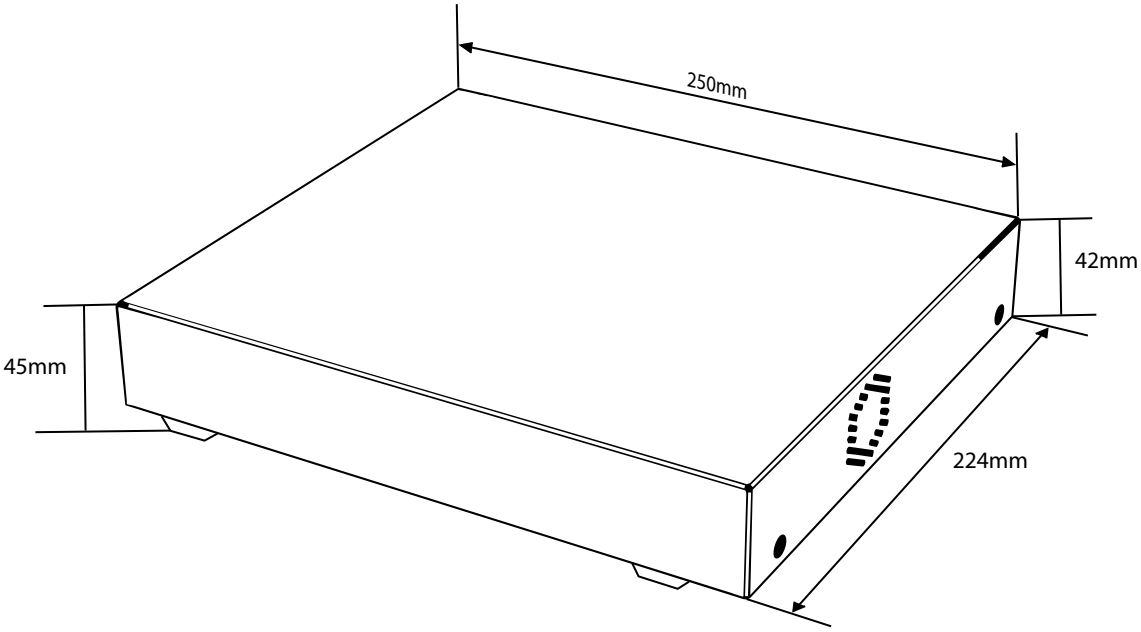
Dimensions