5MP VANDAL BULLET MVF NETWORK CAMERA

HIPC-T4215-DLKZ-I2

- **5MP Full HD Resolution** – Delivers sharp 3072×1728 video @ 30fps
- **Low-Light Performance –** 0.002Lux@ (F1.6, AGC ON), B/W: 0Lux with IR
- **Night Vision** – Up to 80m IR range, 15m white light distance
- **Lens** – 2.7-13.5mm Motorized Varifocal Lens
- **Audio & Alarm Interface –** Built-in microphone, 1CH Alarm IN/OUT
- **Smart AI Detection** – Supports Human and Vehicle Classification, People Counting
- **SD Card Storage** – MicroSD up to 512GB
- **IP67 Weatherproof** – Fully protected against dust and heavy rain
- **IK10 Vandal Resistance** – Ideal for public or high-risk areas

1/2.7" SONY STARVIS IMAGE SENSOR

5 MEGAPIXEL

BUILT IN MIC

SUPPORTS SD CARD UP TO 512GB

IP67 IK10

SYSTEM OVERVIEW

Built with a rugged, vandal-resistant housing, it ensures durability and long-term performance. Ideal for commercial buildings, retail spaces, offices, and public areas, it offers a reliable and secure surveillance solution tailored for modern security needs

WHAT IS HIT TECHNOLOGY ?

HIT (HI-FOCUS Integrated Trust) is a next-generation security framework that strengthens surveillance systems with advanced cyber security and intelligent design. By integrating encrypted data transmission, secure device authentication, and protected remote access, HIT ensures surveillance systems remain secure, reliable, and trusted.

ABOUT HIFOCUS

HI-FOCUS is a trusted leader in surveillance and networking solutions with more than a **Decade of experience** in CCTV Industry. We deliver innovative, reliable, and high-performance security products designed to meet global quality standards. Every HI-FOCUS product is engineered with precision and rigorously tested to ensure superior performance and customer satisfaction.

HI FOCUS
INTEGRATED TRUST

Design and specifications are subject to change without notice. Visit HiFocusCctv.com for the latest product information /specification.

Design and specifications are subject to change without notice. Visit HiFocusCctv.com for the latest product information /specification.

5MP VANDAL BULLET MVF NETWORK CAMERA | HIPC-T4215-DLKZ-I2

Quad Stream

Quad Stream technology enables the CCTV camera to send four video streams simultaneously, offering different quality and bandwidth options for recording, live viewing, mobile apps, and remote access. This ensures clear footage, smooth streaming, flexible monitoring, and efficient bandwidth usage, making everyday surveillance reliable and hassle-free.

OSD Configuration Menu

The intuitive OSD menu enables quick, precise control of image and detection settings for optimal performance in any environment.

Built in Microphone

The built-in microphone captures clear audio along with video footage, enabling better monitoring and providing enhanced awareness of activities in the surveillance area.

Alarm Integration

Equipped with Alarm Input and Alarm Output ports for seamless integration with external security and monitoring systems. Benefits of Automated threat notification and Reduced manual monitoring

Human/Vehicle Analytics

Human/Vehicle Classification intelligently distinguishes people and vehicles while Tripwire and Perimeter Detection help monitor restricted areas and detect unauthorized entry, providing accurate and reliable security alerts.

Design and specifications are subject to change without notice. Visit HiFocusCctv.com for the latest product information /specification.

CORE FEATURES

CAMERA

Image Sensor	1/2.7" CMOS Sony Starvis Image Sensor
Minimum illumination	Color: 0.002Lux@(F1.6, AGC ON), B/W: 0Lux with IR
Shutter Speed	1s-1/100000s
Day&Night	IR-cut filter with auto switch (ICR)
IR LEDs	4
Smart IR	upto 80m
Wave length	850nm
White LEDs	4
Whitelight Distance	Up to 15m
WDR	120dB
S/N	>56dB
Focal Length	2.7-13.5mm
Aperture Range	F1.6, Fixed
Aperture Type	Motorized
Field of View	98.3°~32.2°(H), 54.9°~18.2°(V), 125.6°~37°(D)
DORI Distance	Detect: 56m~240m Observe: 22m~95m Recognize: 11m~48m Identify: 5.6m~24m
Optical Zoom	5x
Digital Zoom	16x

VIDEO

Video Compression	Smart H.265+/H.265/H.264B/ H.264M/H.264H
Video Bit Rate	32k-6Mbps
Audio Compression	G.711A/G.711U/ADPCM_D
Audio Sampling Rate	8kHz/32kHz/48kHz
Max. Resolution	5MP, 3072×1728@30fps
Main Stream	PAL:25fps(3072×1728,2688×1520, 2560×1440,2304×1296,1920×1080, 1280×720) NTSC:30fps(3072×1728,2688×1520, 2560×1440,2304×1296, 1920×1080,1280×720)
Sub Stream	PAL:25fps(704×576,704×288, 640×360,352×288) NTSC:30fps(704×480, 704×240,640×360,352×240)
Third Stream	4CIF(704x576) / 704×480 @30fps / 25Fps
Fourth Stream	704×480 @30fps / 25Fps (Optional)
Streams	Quad Stream (AI Disabled), Dual Stream (AI Enabled)
BLC	Supported
HLC	Supported
AGC	Supported
3DNR	Supported
White Balance	Auto/Semi-auto/Manual/Sunshine Nature Light/Warm light Lamp/ Daylight lamp/Filament Lamp/ Locked White Balance
ROI	8 areas
OSD	16 x 16/32 x 32/48 x 48/64 x 64/ 96 x 96
Defog	Supported
Privacy Mask	4 regions

INTELLIGENT ANALYSIS

Basic Event	Motion Detection, Mask Alarm, Alarm Input, Disk Full Disk R/W Error, IP Address Conflict, Network Disconnection
AI Functions	People Counting
Smart Detection	Supports Human/Vehicle Classification, Tripwire, Perimeter detection

SECURITY

Cyber Security	AES 256-bit Encryption, Configuration encryption, trusted execution, Digest, security logs, account lockout, syslog, video encryption, IP/MAC filtering, HTTPS, trusted upgrade, trusted boot

Design and specifications are subject to change without notice. Visit HiFocusCctv.com for the latest product information /specification.

INTERFACE

Network Interface	1×RJ-45(10/100Base-T)
Built-in Mic	Supported
Audio	1 × Input, and 1 × Output
Alarm	1 × Input, and 1 × Output
Reset Button	Supported
On-Board Storage	Built-in Micro SD card slot, up to 512 GB

NETWORK

ANR	Yes
Protocols	RTSP, HTTPS, TCP, UDP, UPnP, ICMP, SNMPv3, DHCP, DNS, DDNS, NTP, TLSv1.2/v1.3, QoS, IPv4, SSH, Unicast, Multicast, ARP, FTP
System Compatibility	Onvif (Profile S, G, T, M), SDK, CGI
Remote Connection	≤2
Client	HF Prime VMS

GENERAL

Operating Temperature	-35°C~65°C(-31°F~149°F)
Operating Humidity	≤95%RH
Storage Temperature	-35°C~65°C(-31°F~149°F)
Storage Humidity	10%~95%RH(non-condensing)
Power Supply	DC12V±25%, Max. 8W, PoE:IEEE 802.3af, Max. 9W
Ingress Protection	Surge protection 4000V, ESD6000V, IP67
Certification	EMI/EMC, ISO9001, CE, FCC and RoHS, BIS, STQC approved compliance report, REACH, ESD 4KV, BIS-ER-01, BIS-IS-13252
Boundary Dimensions	239(L)90(W)90(H)mm
Package Dimensions	280(L)125(W)140(H)mm
Gross Weight	1.147kg

Design and specifications are subject to change without notice. Visit HiFocusCctv.com for the latest product information /specification.
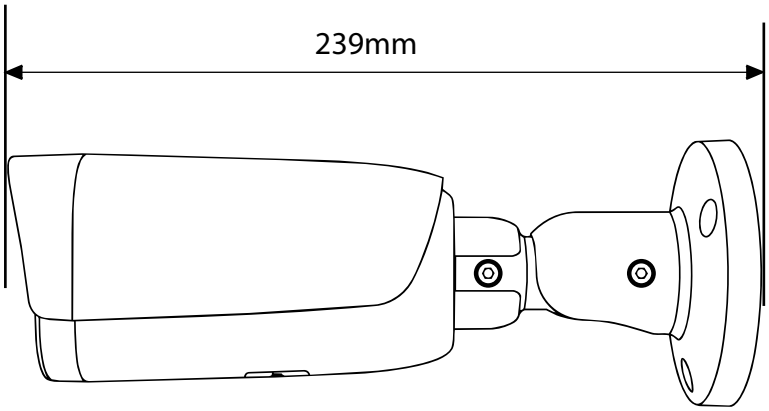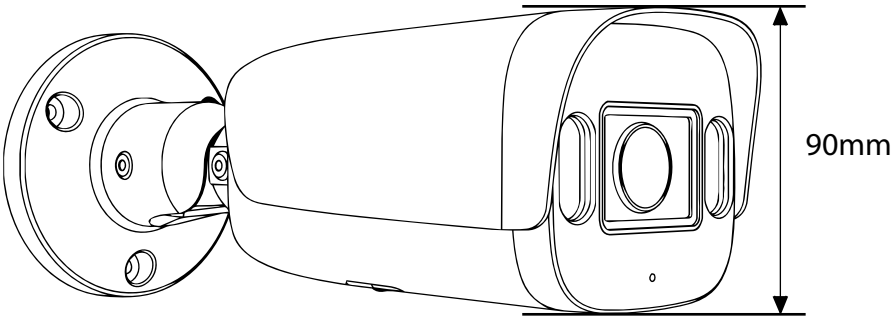
Dimensions