5MP VANDAL DOME MVF NETWORK CAMERA

HIPC-D3215-DLSZ-I2

- **5MP Full HD Resolution** – Delivers sharp 3072×1728 video @ 30fps
- **Low-Light Performance –** 0.002Lux@ (F1.6, AGC ON), B/W: 0Lux with IR
- **Night Vision** – Up to 30m IR range, 10m white light distance
- **Lens** – 2.7-13.5mm Motorized Varifocal Lens
- **Two Way Audio –** Built-in microphone and speaker
- **Smart AI Detection** – Supports Human and Vehicle Classification, People Counting
- **SD Card Storage** – MicroSD up to 512GB
- **IP67 Weatherproof** – Fully protected against dust and heavy rain
- **IK10 Vandal Resistance** – Ideal for public or high-risk areas

1/2.7" SONY STARVIS IMAGE SENSOR

5 MEGAPIXEL

BUILT IN MIC

TWO WAY AUDIO

SUPPORTS SD CARD UP TO 512GB

IP67 IK10

SYSTEM OVERVIEW

Built with a rugged, vandal-resistant housing, it ensures durability and long-term performance. Ideal for commercial buildings, retail spaces, offices, and public areas, it offers a reliable and secure surveillance solution tailored for modern security needs

WHAT IS HIT TECHNOLOGY ?

HIT (HI-FOCUS Integrated Trust) is a next-generation security framework that strengthens surveillance systems with advanced cyber security and intelligent design. By integrating encrypted data transmission, secure device authentication, and protected remote access, HIT ensures surveillance systems remain secure, reliable, and trusted.

ABOUT HIFOCUS

HI-FOCUS is a trusted leader in surveillance and networking solutions with more than a **Decade of experience** in CCTV Industry. We deliver innovative, reliable, and high-performance security products designed to meet global quality standards. Every HI-FOCUS product is engineered with precision and rigorously tested to ensure superior performance and customer satisfaction.

HI FOCUS
INTEGRATED TRUST

Design and specifications are subject to change without notice. Visit HiFocusCctv.com for the latest product information /specification.

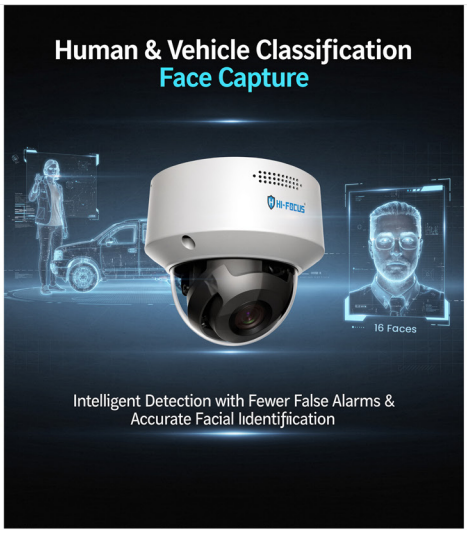

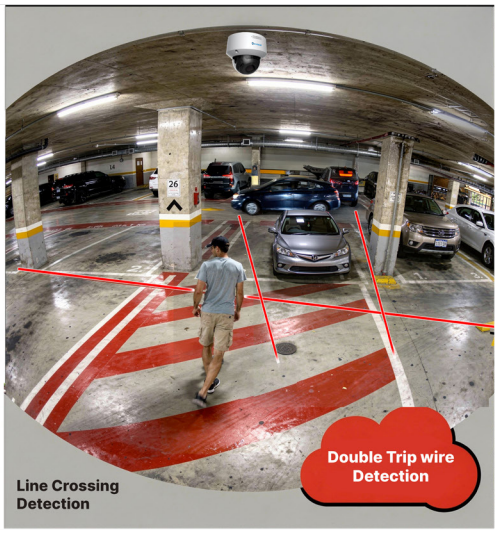

Design and specifications are subject to change without notice. Visit HiFocusCctv.com for the latest product information /specification.

5MP VANDAL DOME MVF NETWORK CAMERA | HIPC-D3215-DLSZ-I2

Quad Stream

Quad Stream technology enables the CCTV camera to send four video streams simultaneously, offering different quality and bandwidth options for recording, live viewing, mobile apps, and remote access. This ensures clear footage, smooth streaming, flexible monitoring, and efficient bandwidth usage, making everyday surveillance reliable and hassle-free.

OSD Configuration Menu

The intuitive OSD menu enables quick, precise control of image and detection settings for optimal performance in any environment.

Two-Way Audio

Built-in two-way audio enables real-time communication through the camera, allowing users to listen and speak remotely for instant response, guidance, or deterrence.

Advanced Night Surveillance

IR range up to 30 meters delivers clear black-and-white video in complete darkness, while white light up to 10 meters provides full-color monitoring in low-light conditions.

Human/Vehicle Analytics

Human/Vehicle Classification intelligently distinguishes people and vehicles while Tripwire and Perimeter Detection help monitor restricted areas and detect unauthorized entry, providing accurate and reliable security alerts.

Design and specifications are subject to change without notice. Visit HiFocusCctv.com for the latest product information /specification.

CORE FEATURES

CAMERA

Image Sensor	1/2.7" CMOS Sony Starvis Image Sensor
Minimum illumination	Color: 0.002Lux@(F1.6, AGC ON), B/W: 0Lux with IR
Shutter Speed	1s-1/100000s
Day&Night	IR-cut filter with auto switch (ICR)
IR LEDs	18
Smart IR	upto 30m
Wave length	850nm
White LEDs	18
Whitelight Distance	Up to 10m
WDR	120dB
S/N	>56dB
Focal Length	2.7-13.5mm
Aperture Range	F1.6, Fixed
Aperture Type	Motorized
Field of View	98.3°~32.2°(H), 54.9°~18.2°(V), 125.6°~37°(D)
DORI Distance	Detect: 56m~240m Observe: 22m~95m Recognize: 11m~48m Identify: 5.6m~24m
Optical Zoom	5x
Digital Zoom	16x

VIDEO

Video Compression	Smart H.265+/H.265/H.264B/H.264M/H.264H/Motion JPEG
Video Bit Rate	32k-6Mbps
Audio Compression	G.711A/G.711U/ADPCM_D
Audio Sampling Rate	8kHz/32kHz/48kHz
Max. Resolution	5MP, 3072×1728@30fps
Main Stream	PAL:25fps(3072×1728, 2688×1520, 2560×1440, 2304×1296, 1920×1080, 1280×720) NTSC:30fps(3072×1728, 2688×1520, 2560×1440, 2304×1296,1920×1080, 1280×720)
Sub Stream	PAL:25fps(704×576, 704×288, 640×360, 352×288) NTSC:30fps(704×480, 704×240, 640×360, 352×240)
Third Stream	4CIF(704x576) / 704×480 @30fps / 25Fps
Fourth Stream	704×480 @30fps / 25Fps (Optional)
Streams	Quad Stream (AI Disabled), Dual Stream (AI Enabled)
BLC	Supported
HLC	Supported
AGC	Supported
3DNR	Supported
White Balance	Auto/Semi-auto/Manual/Sunshine/Natural light/Warm light/Daylight Lamp/Filament Lamp/Locked white balance
ROI	8 rectangular static areas
OSD	16 x 16/32 x 32/48 x 48/64 x 64/96 x 96
Defog	Supported
Privacy Mask	4 regions

INTELLIGENT ANALYSIS

Basic Event	Motion Detection, Mask Alarm, Disk Full, Disk R/W Error, IP Address Conflict, Network Disconnection
AI Functions	People Counting
Smart Detection	Supports Human/Vehicle Classification, Tripwire, Perimeter detection
Rules of Behavior Analyse In 1 Scene	2

SECURITY

Cyber Security	AES 256-bit Encryption, Configuration encryption, trusted execution, Digest, security logs, account lockout, syslog, video encryption, IP/MAC filtering, HTTPS, trusted upgrade, trusted boot

Design and specifications are subject to change without notice. Visit HiFocusCctv.com for the latest product information /specification.

INTERFACE

Network Interface	1×RJ-45(10/100Base-T)
Built-in Mic & Speaker	Supported
Reset Button	Supported
Audio	1CH IN/1CH OUT
Alarm	1CH IN/1CH OUT
On-Board Storage	Built-in Micro SD card slot, up to 512 GB

NETWORK

ANR	Yes
Protocols	RTSP, HTTPS, TCP, UDP, UPnP, ICMP, SNMPv3, DHCP, DNS, DDNS, NTP, TLS v1.2/v1.3, QoS, IPv4, SSH, Unicast, Multicast, ARP, FTP
System Compatibility	Onvif (Profile S, G, T, M), SDK, CGI
Remote Connection	≤2
Client	HF Prime VMS

GENERAL

Operating Temperature	-35°C~65°C(-31°F~149°F)
Operating Humidity	≤95%RH
Storage Temperature	-35°C~65°C(-31°F~149°F)
Storage Humidity	10%~95%RH(non-condensing)
Power Supply	DC12V±25%, Max. 7W, PoE:IEEE 802.3af, Max. 8W
Ingress Protection	Surge4000V, ESD6000V, IP67, IK10
Vandal Resistance	IK10
Certification	EMI/EMC, ISO9001, CE, FCC and RoHS, BIS, STQC approved compliance report, REACH, ESD 4KV, BIS-ER-01, BIS-IS-13252
Boundary Dimensions	143(L)143(W)123(H)mm
Package Dimensions	250(L)180(W)175(H)mm
Gross Weight	1.147kg

Design and specifications are subject to change without notice. Visit HiFocusCctv.com for the latest product information /specification.
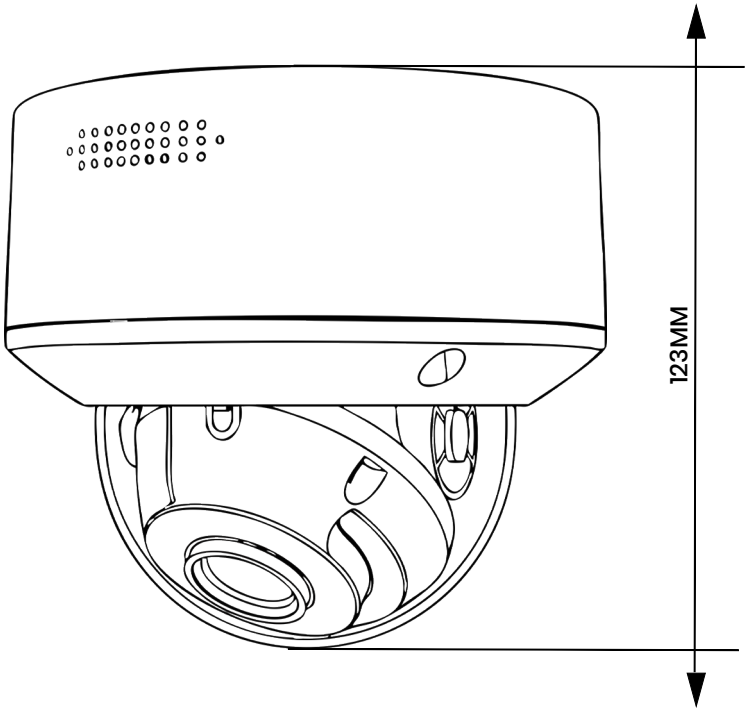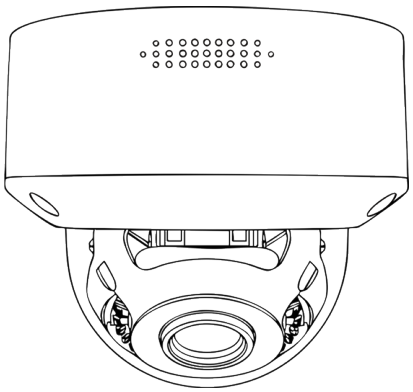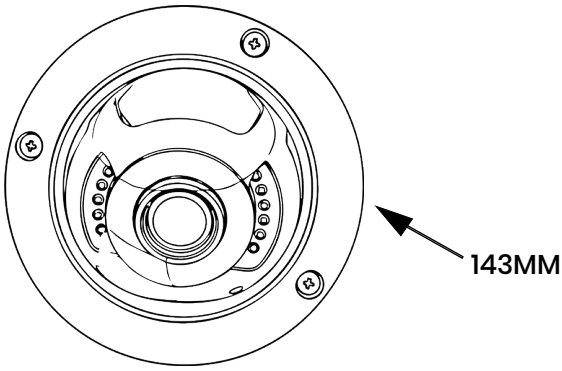
Dimensions