4 MP DOME NETWORK CAMERA

HIPC-D3004E-RDL-I3

- **4 MP High Definition –** 4MP, 2560×1440 @30fps
- **Lens –** 2.8mm Fixed Lens
- **Video Compression –** Smart H.265+ / H.265 / H.264B / H.264M / H.264H
- **Low-Light Performance –** 0.02Lux (F1.6, AGC ON), 0Lux with IR
- **Night Vision –** Smart IR up to 30m
- **White Light -** Up to 15m White Light Distance
- **Wide Dynamic Range –** DWDR Support
- **Built-in Microphone –** Real-Time audio capture
- **Smart Detection –** Human & Vehicle Detection
- **Network Compatibility –** ONVIF Profile S,T, SDK, CGI
- **Power Supply –** PoE IEEE 802.3af, Max. 4W

1/3" CMOS IMAGE SENSOR

4 MEGAPIXEL

BUILT IN MIC

30M IR 15M WHITE LIGHT

SYSTEM OVERVIEW

4MP Bullet Camera provides clear 2560×1440 video at 30fps, with 30m Smart IR and 15m white light for day-and-night surveillance. Features DWDR, human & vehicle detection, built-in microphone, Smart H.265+, and ONVIF.

WHAT IS HIT TECHNOLOGY ?

HIT (HI-FOCUS Integrated Trust) is a next-generation security framework that strengthens surveillance systems with advanced cyber security and intelligent design. By integrating encrypted data transmission, secure device authentication, and protected remote access, HIT ensures surveillance systems remain secure, reliable, and trusted.

ABOUT HIFOCUS

HI-FOCUS is a trusted leader in surveillance and networking solutions with more than a **Decade of experience** in CCTV Industry. We deliver innovative, reliable, and high-performance security products designed to meet global quality standards. Every HI-FOCUS product is engineered with precision and rigorously tested to ensure superior performance and customer satisfaction.

HI FOCUS
INTEGRATED TRUST

Design and specifications are subject to change without notice. Visit HiFocusCctv.com for the latest product information /specification.

HI-FOCUS®

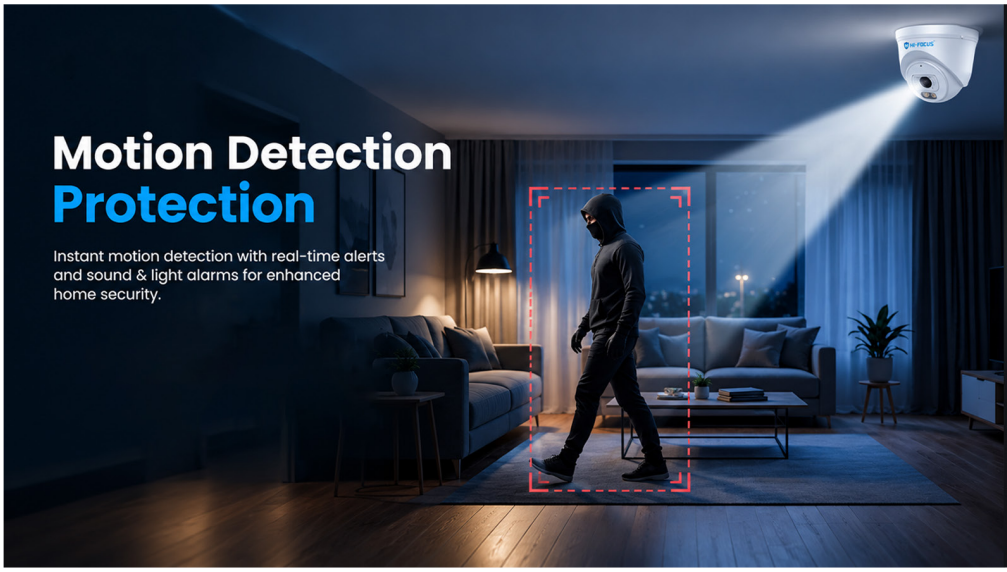

Motion Detection Protection

Instant motion detection with real-time alerts and sound & light alarms for enhanced home security.

See Every Detail in 4MP

Sharper. Clearer. Smarter Indoor Security.

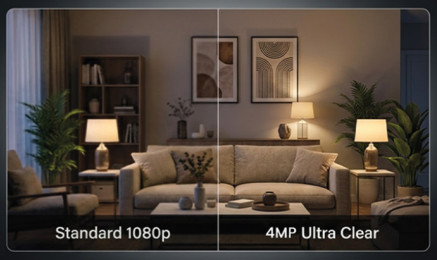

30m IR

15M White Light

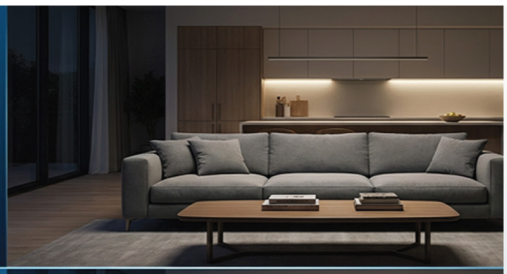

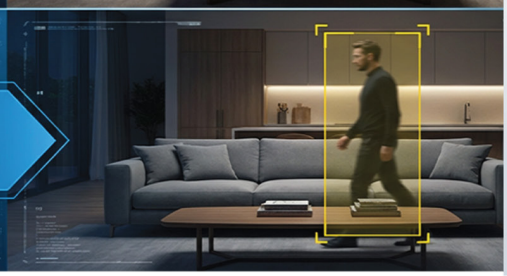

Human & Vehicle Triggered Mode

Built-in Mic

Support 1-Way Audio Recording.

Educational Institutions & ATM

Ensure student and staff safety across classrooms, hallways, and campus areas. 24/7 remote monitoring ensure customer safety and prevent fraud with smart surveillance designed for ATM environments.

Design and specifications are subject to change without notice. Visit HiFocusCctv.com for the latest product information /specification.

4MP DOME NETWORK CAMERA | HIPC-D3004E-RDL-I3

Dual Stream

Dual Stream technology enables the CCTV camera to send two video streams simultaneously one high quality stream for clear recording and storage, and a secondary low bandwidth stream for smooth live viewing on mobile apps and remote access.
This ensures sharp footage, faster streaming, and efficient bandwidth usage, making everyday monitoring reliable and hassle-free.

OSD

The intuitive OSD menu enables quick, precise control of image and detection settings for optimal performance in any environment.

Dual Night Vision Illumination

IR night vision up to 30 meters provides clear black and white monitoring in complete darkness.
The integrated 15-meter white light delivers bright, full-color video in low-light conditions. With dual illumination, you get sharp, reliable surveillance in changing lighting environments.

Built-in Mic

Built-in Microphone enables real-time audio capture, recording clear sound from the monitored area.
It adds an extra layer of security by capturing conversations and ambient sounds, providing comprehensive video and audio surveillance.

Design and specifications are subject to change without notice. Visit HiFocusCctv.com for the latest product information /specification.

CORE FEATURES

CAMERA

Image Sensor	1/3"CMOS
Minimum illumination	Color:0.02Lux@(F1.6,AGC ON), B/W:0Lux with IR
Shutter Speed	1s~1/100000s
Day&Night	IR-cut filter with auto switch (ICR)
IR LEDs	2
Smart IR	Upto 30m
Wave length	850nm
White LEDs	2
Whitelight Distance	Upto 15m
WDR	DWDR
S/N	>52dB
Focal Length	2.8mm
Aperture Range	F1.6
Aperture Type	Fixed
Field of View	91.5°(H), 51.2°(V), 103.6°(D)
DORI Distance	Detect: 56m Observe: 22.2m Recognize: 11.2m Identify: 5.6m

VIDEO

Video Compression	Smart H.265+/H.265/H.264B/ H.264M/H.264H
Video Bit Rate	32k~6Mbps
Audio Compression	G.711A/G.711U
Audio Sampling Rate	8kHz
Max. Resolution	4MP, 2560×1440@30fps
Main Stream	PAL: 25fps(2560×1440, 2304×1296, 1920×1080, 1280×720) NTSC: 30fps(2560×1440, 2304×1296, 1920×1080, 1280×720)
Sub Stream	PAL: 25fps(704×576, 704×288, 640×360, 352×288) NTSC: 30fps(704×480, 704×240, 640×360, 352×240)
BLC	Supported
HLC	Supported
AGC	Supported
3DNR	Supported
White Balance	Auto/Semi-Auto/Manual/ Sunshine/Nature Light/Warmlight Lamp/Daylight Lamp/ Filament Lamp/Lock White Balance
OSD	16x16/32x32/48x48/64x64
Defog	Supported
Privacy Mask	4 regions

INTELLIGENT ANALYSIS

Basic Event	Smart Alarm (human and vehicle detection), IP Address Conflict,Trigger Capture

SECURITY

Cyber Security	AES 256-bit Encryption, Configuration encryption, trusted execution, Digest, security logs, account lockout, syslog, video encryption, IP/MAC filtering, HTTPS, trusted upgrade, trusted boot

INTERFACE

Network Interface	1×RJ-45 (10/100 Base-T)
Built-in Mic	Supported

NETWORK

Protocols	RTSP, HTTP, TCP, UDP, ICMP, DHCP, DNS, NTP, IPv4, SSH, Unicast
System Compatibility	P2P(Mutually exclusive with Onvif), ONVIF(Profile S,T) , SDK, CGI
Client	HF Prime VMS

Design and specifications are subject to change without notice. Visit HiFocusCctv.com for the latest product information /specification.

GENERAL

Operating Temperature	-30°C~60°C(-22°F~140°F)
Operating Humidity	≤95%RH
Storage Temperature	-30°C~60°C(-22°F~140°F)
Storage Humidity	10%~95%RH(non-condensing)
Power Supply	PoE:IEEE 802.3af,Max. 4W
Surge Protection	Surge4000V, ESD6000V
Certification	EMI/EMC, ISO9001, CE, FCC and RoHS, BIS, STQC approved compliance report, REACH, ESD 4KV, BIS-ER-01, BIS-IS-13252
Boundary Dimensions	117(L)117(W)96(H)mm
Package Dimensions	140(L)140(W)120(H)mm
Gross Weight	0.38kg

Design and specifications are subject to change without notice. Visit HiFocusCctv.com for the latest product information /specification.
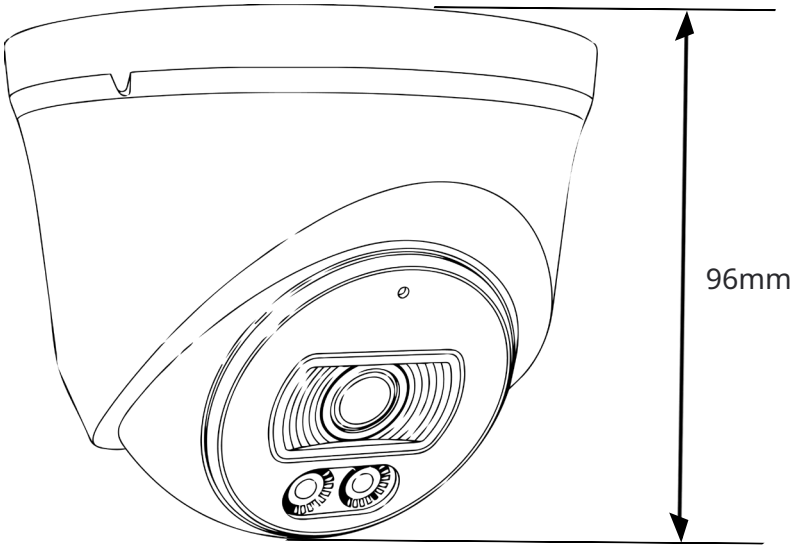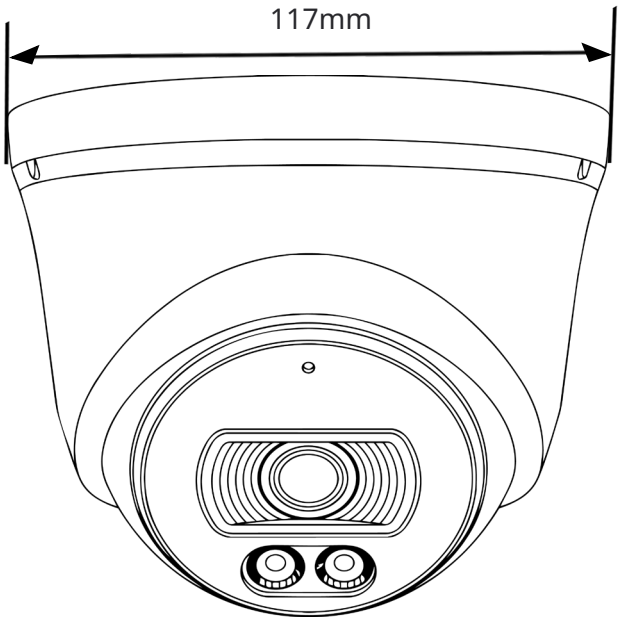
Dimensions