40 CHANNEL NETWORK VIDEO RECORDER

HD-NVR-7840I

- **40 CH NVR –** 400Mbps Incoming / 400Mbps Outgoing Bandwidth
- **Max Resolution –** 16MP/12MP/8MP/6MP/5MP/4MP/3MP/1080P/ UXGA/720P/VGA/4CIF/DCIF/2CIF/CIF/QCIF
- **Compression –** Smart H.265+ / H.265 / H.264+ / H.264
- **Video Output –** HDMI Upto 4k & VGA up to 1080P
- **Multi Display –** 1/2/3/4/5/6/7/8/9/10/12/13/16/20A/20B/ 25/32/36/40
- **Playback –** 16 CH Simultaneous Playback
- **Storage –** 8× SATA Up to 20TB HDD Capacity
- **AI by Camera –** Tripwire, Double Tripwire, Perimeter, Object Abandon/Missing, Loitering, Face Detection, Running, Parking, Crowd Detection etc.
- **AI by NVR -** Face Detection/ Recognition, Video Structuralization, Tripwire, Double Tripwire, Running, Parking, Heatmap etc.

40 CH NVR MULTI RECORDING | 16 MP MAX RESOLUTION | 8 SATA SLOT UPTO 20TB | INCOMING/OUTGOING BANDWIDTH | AI FEATURES

SYSTEM OVERVIEW

Supports up to 40 Channels with high 400Mbps bandwidth for powerful and scalable surveillance performance.
Delivers ultra-clear imaging up to 16MP with advanced decoding for smooth live view and playback across multiple streams.
Equipped with intelligent AI features including face recognition, perimeter protection, human attributes, and behavior analysis.
Enhanced storage with up to 8 SATA drives and eSATA support ensures reliable and flexible data management.
Built for enterprise applications with dual display output, robust networking, and efficient video compression technology.

ABOUT HIFOCUS

HI-FOCUS is a trusted leader in surveillance and networking solutions with more than a **Decade of experience** in CCTV Industry. We deliver innovative, reliable, and high-performance security products designed to meet global quality standards. Every HI-FOCUS product is engineered with precision and rigorously tested to ensure superior performance and customer satisfaction.

Design and specifications are subject to change without notice. Visit HiFocusCctv.com for the latest product information /specification.

Design and specifications are subject to change without notice. Visit HiFocusCctv.com for the latest product information /specification.

40 CHANNEL NETWORK VIDEO RECORDER | HD-NVR-7840I

Video & Audio

Supports 40 channels with 400 Mbps incoming/ outgoing bandwidth, reduced when AI is enabled. Handles resolutions from 16MP to QCIF, with robust preview and playback decoding capabilities. Audio includes 1 input, 1 output, and 2-way communication for integrated surveillance monitoring.

Intelligent Analytics

AI by camera supports tripwire, perimeter, object abandon/ missing, people counting, loitering, smoke/fire detection. AI by NVR adds face detection/recognition, structuralization, smart motion, sleeping/on-duty detection. VCA search enables face, human attributes, thermographic, electric bicycle, and duty search.

Face Recognition

Detects gender, age, glasses, mask, body temperature, with up to 20 face libraries. Supports 100,000 base images and 8-channel 1080P video streams or 32-channel image streams. Face picture comparison is supported, alongside detailed human attribute search for analytics.

AI Performance

Perimeter/tripwire supports 24 channels, object abandon/missing 8 channels (1080P). Other features like sleeping/on-duty, loitering/running, parking, heatmap are 8 channels 1080P. Smart motion detection supports 32 channels, and people counting is 8 channels (1080P).

Storage & RAID

Supports 8 SATA drives, each up to 20 TB, with flexible RAID configurations (JBOD, RAID0/1/5/6/10/50/60). Ensures reliable storage for continuous recording and AI processing. Scalable for medium to large surveillance deployments.

Interfaces

Includes 1 eSATA, 2 USB2.0, 1 USB3.0, 2 RJ-45, 1 RS-232, 2 RS-485 ports for expansion. Supports network and peripheral integration for complex surveillance environments. Provides versatile connectivity for various monitoring and control needs.

Design and specifications are subject to change without notice. Visit HiFocusCctv.com for the latest product information /specification.

CORE FEATURES

Video and Audio

Channel	40
Incoming Bandwidth	400Mbps(AI on: 320Mbps)
Outgoing Bandwidth	400Mbps(AI on: 200Mbps)
Resolution	16MP/12MP/8MP/6MP/5MP/ 4MP/3MP/1080P/UXGA/720P/ VGA/4CIF/DCIF/2CIF/CIF/ QCIF
Preview Decoding Capability	16MP(30fps)×3, 12MP(30fps)×4, 8MP(30fps)×7, 6MP(30fps)×9, 5MP(30fps)×11, 4MP(30fps)×14, 3MP(30fps)×18, 1080P(30fps)× 28, 720P(30fps)×40, 4CIF (30fps)×40 (AI on:16MP(30fps) ×2, 12MP(30fps)×3, 8MP(30fps) ×5, 6MP(30fps)×6, 5MP(30fps) ×8, 4MP(30fps)×10, 3MP(30fps) ×13, 1080P(30fps)×20, 720P (30fps)×40)
Preview Decoding Capability	16MP(30fps)×3, 12MP(30fps)×4, 8MP(30fps)×7, 6MP(30fps)×9, 5MP(30fps)×11, 4MP(30fps)×14, 3MP(30fps)×16, 1080P(30fps)×16, 720P(30fps)×16, 4CIF(30fps)×16 (AI on:16MP(30fps)×2, 12MP (30fps)×3, 8MP(30fps)×5, 6MP (30fps)×6, 5MP(30fps)×8, 4MP (30fps)×10, 3MP(30fps)×13, 1080P(30fps)×16, 720P(30fps)×16)
Compatibility	ONVIF(Profile S/T/G), CGI, SDK, P2P
HDMI Output	HDMI: 800×600(60Hz), 1024×768(60Hz), 1280×720 (50Hz/60Hz), 1280×800(60Hz), 1280×1024(60Hz), 1366×768 (60Hz), 1440×900(60Hz), 1920×1080(50Hz/60Hz), 2560×1440(30Hz/60Hz), 2560×1600(60Hz), (4K) 3840×2160(30Hz/60Hz)
VGA Output	VGA: 800×600(60Hz), 1024×768 (60Hz), 1280×720(50Hz/60Hz), 1280×800(60Hz), 1280×1024 (60Hz), 1366×768(60Hz), 1440×900(60Hz), 1920×1080 (50Hz/60Hz)
Multi-screen Display	Independent Output: HDMI1/VGA1: 1/2A/2B/3/4/5/6 /7/8/9/10/12/13/16/20A/20B/25 /32/36/40 HDMI2/VGA2: 1/2A/ 2B/3/4/5/6/7/8/9/10/12/13/16/ 20A/20B/25/32/36/40
Audio Input	1CH
Audio Output	1CH
Two-Way Audio	1CH

Compression Standard

Video Compression	Smart H.265+, H.265, Smart H.264+, H.264
Audio Compression	G.711A, G.711U, AAC, ADPCM_D
Stream Type	Video, Video & Audio

Network

Network Protocol	802.1X, ARP, DDNS, DHCP, DNS, Easy DDNS, FTP, HTTP, HTTPS, ICMP, IGMP, IPv4, IPv6, Multicast, NFS, NTP, PPPoE, QoS, RTCP, RTP, RTSP, SMB/ CIFS, SMTP, SNMP v1/v2/v3, SRTP, SSH, SSL, TLSv1.2, TCP, UDP, Unicast, UPnP
Moblie Client System Compatibility	Android, iOS ONVIF(Profile S/T/G), RTSP, CGI, SDK, P2P
Web	IE10+, Firefox52+, Edge89+, Safari11+, Chrome57+

Recording

Multi-channel Playback	16
Record Mode	Manual Recording, Alarm Recording, Schedule Recording
Storage Method	Local HDD, eSATA
Backup	USB storage device, eSATA, Network
Playback Function	Play/Pause/Stop/Reverse/ Slow/Speed/Backwards 30s/ Forwards 30s/Full Screen/ Backup (Video Editing)/Step/ Digital Zoom/Instant Replay

Design and specifications are subject to change without notice. Visit HiFocusCctv.com for the latest product information /specification.

Dual Stream Record	Yes

Alarm

General Alarm	Motion Detection, Mask Alarm, Alarm Input(IPC), Alarm Input (NVR)
Exception Notification	Video Loss, Network Disconnected, No Disk, Illegal Access, Disk group space alert, Disk Full, Disk R/W Error, Recording Abnormal, Abnormal found in smart of disk, Abnormal temperature of the disk, Hot-spare Exception, Array Exception, Voltage Alarm(IPC), RTC Failure, IP Address Conflict, MAC Address Conflict, Disk Overload
Alarm I/O	16CH IN / 4CH OUT

Intelligent Analytics

AI by Camera	Tripwire, Double Tripwire, Perimeter, Object Abandon, Object Missing, Running, Parking, Heatmap, Loitering, Video Abnormal, Audio Abnormal, On Duty Detection, Crowd Detection, Safety Helmet Detection, Electric Bicycle Detection, People Counting, Link to Tracking, Smoke and Fire Detection, Environmental Temperature Measurement, Face Detection, Human Body Temperature Measurement, Smart Alarm, Face Recognition, Human/Vehicle Classification
AI by NVR	Face Detection, Face Recognition, Video Structuralization (excludes vehicle detection), Tripwire, Double Tripwire, Perimeter, Object Abandon, Object Missing, Running, Parking, Heatmap, Sleeping on Duty Detection, On Duty Detection, Smart Motion Detection, Loitering, People Counting
VCA Search	Early-warning Search, Behavior Search, Safety Helmet Search, Thermographic Retrieval, Duty Search, Electric Bicycle Retrieval, Face Search(Search by face attributes/ event/ picture), Sleeping on Duty Detection, Smart Motion Detection, Human Search(Search by human attributes)
VCA Report	Heatmap, People Counting, Face Statistics

Design and specifications are subject to change without notice. Visit HiFocusCctv.com for the latest product information /specification.

Face Recognition

Face Attributes Detection	Gender, Age, Glasses, Face Mask
Face Attributes Search	Gender, Age, Glasses, Face Mask, Body Temp
Face Recognition Performance	8-ch(1080P) video streams or 32-ch image streams
Face Picture Library	Up to 20 face libraries Up to 100000 base images
Face Picture Comparison	Supported
Video Structuralization Performance	8-ch(1080P) (excludes vehicle detection)
Human Attributes Detection	Gender, Age, Backpack, Face Mask, Glasses, Hair, Carrying Status, Top Color, Bottom Color, Top Type, Bottom Type, Riding Status, Hat
Human Attributes Search	Gender, Age, Backpack, Face Mask, Glasses, Hair, Carrying Status, Top Color, Bottom Color, Top Type, Bottom Type, Riding Status, Hat

AI Performance(AI by NVR)

Perimeter/Tripwire Performance	24CH
Object Abandon/Missing Performance	8CH (1080P)
Sleeping on Duty Performance	8CH (1080P)
On Duty Performance	8CH (1080P)
Loitering/Running Performance	8CH (1080P)
Parking Performance	8CH (1080P)
Heatmap Performance	8CH (1080P)
Smart Motion Dection Performance	32CH
People Counting Performance	8CH (1080P)

Design and specifications are subject to change without notice. Visit HiFocusCctv.com for the latest product information /specification.

Storage

Hard Disk Capacity	8 × SATA up to 20 TB
RAID	JBOD, RAID0, RAID1, RAID5, RAID6, RAID10, RAID50, RAID60

INTERFACE

eSATA	1×eSATA
USB	2×USB2.0, 1×USB3.0
Network Interface	2×RJ-45, 10/100/1000 Mbps self-adaptive Ethernet port
RS-232	1×RS-232
RS-485	2×RS-485

General

Power Supply	100~240V AC
Power Consumption	≤18W (HDD not included)
NetWeight	6.2Kg
GrossWeight	8.4Kg
Boundary Dimensions	440(L) 455(W) 94(H) mm
Package Dimensions	565(L) 565(W) 220(H)mm
Operating Temperature	-10°C~+55°C (+14°F~+131°F)
Operating Humidity	10%~90%RH (non-condensing)
Storage Temperature	-20°C~+60°C (-4°F~+140°F)

Design and specifications are subject to change without notice. Visit HiFocusCctv.com for the latest product information /specification.

Dimensions

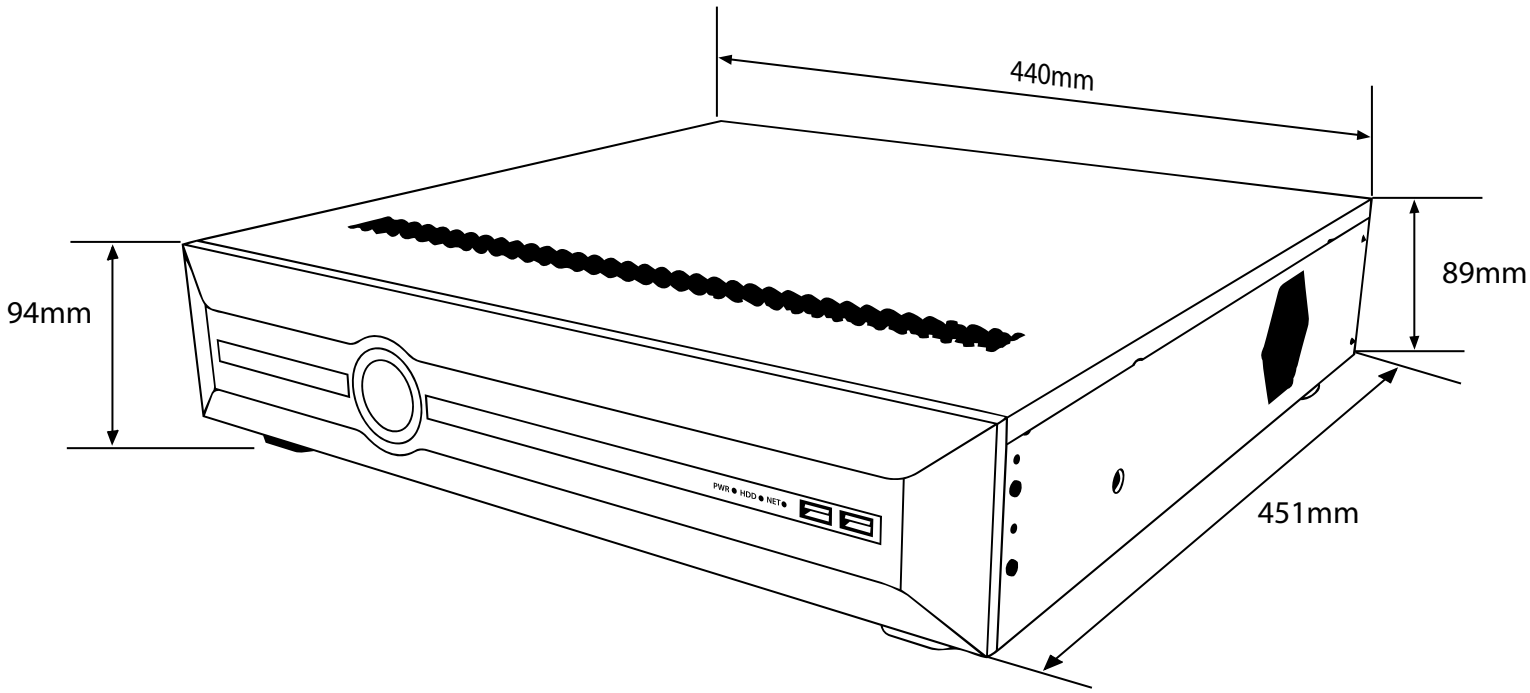

Design and specifications are subject to change without notice. Visit HiFocusCctv.com for the latest product information /specification.