80 CHANNEL NETWORK VIDEO RECORDER

HD-NVR-5880I

- **80 CH NVR –** 640Mbps Incoming / 320Mbps Outgoing Bandwidth
- **Max Resolution –** 16MP/12MP/8MP/6MP/5MP/4MP/3MP/1080P/ UXGA/720P/VGA/4CIF/DCIF/2CIF/CIF/QCIF
- **Compression –** Smart H.265+ / H.265 / H.264+ / H.264
- **Video Output –** HDMI Upto 4k & VGA up to 1080P
- **Multi Display –** 1/2/3/4/5/6/7/8/9/10/12/13/16/20A/20B/ 25/32/36/40/64/80
- **Playback –** 16 CH Simultaneous Playback
- **Storage –** 8× SATA Up to 20TB HDD Capacity
- **AI by Camera –** Tripwire, Double Tripwire, Perimeter, Object Abandon/Missing, Loitering, Face Detection, Running, Parking, Crowd Detection etc.
- **AI by NVR -** Face Detection/ Recognition, Video Structuralization, Tripwire, Double Tripwire, Running, Parking, Heatmap etc.

80 CH NVR MULTI RECORDING | 16 MP MAX RESOLUTION | 8 SATA SLOT UPTO 20TB | INCOMING/OUTGOING BANDWIDTH | AI FEATURES

SYSTEM OVERVIEW

Supports up to 80 Channels with high 400Mbps bandwidth for ultra-large, high-performance surveillance systems.
Delivers crystal-clear imaging up to 16MP with powerful decoding for smooth live view and playback across multiple streams.
Advanced AI capabilities including face recognition, perimeter protection, human attributes, and intelligent behavior analysis.
Massive storage support with up to 8 SATA drives and RAID ensures secure, scalable, and reliable data management.
Built for enterprise deployments with dual HDMI output, multi-screen display, and robust networking for maximum efficiency.

ABOUT HIFOCUS

HI-FOCUS is a trusted leader in surveillance and networking solutions with more than a **Decade of experience** in CCTV Industry. We deliver innovative, reliable, and high-performance security products designed to meet global quality standards. Every HI-FOCUS product is engineered with precision and rigorously tested to ensure superior performance and customer satisfaction.

Design and specifications are subject to change without notice. Visit HiFocusCctv.com for the latest product information /specification.

Design and specifications are subject to change without notice. Visit HiFocusCctv.com for the latest product information /specification.

80 CHANNEL NETWORK VIDEO RECORDER | HD-NVR-5880I

Video & Audio

NVR supports 80 channels with 640 Mbps Incoming and 320 Mbps Outgoing Bandwidth. It Handles resolutions from 16MP to QCIF and high-frare decoding. Audio includes 1 input, 1 output, and 2-way audio, supporting video & audio streams.

Alarm & Exception Handling

Alarms include motion, mask detection, and IPC/NVR triggers. Exception notifications cover video loss, network errors, disk errors, IP/MAC conflicts. Alarm interface has 16 inputs and 4 outputs for extensive integration.

Intelligent Analytics

AI features detect tripwire, perimeter, object abandon/missing, people counting, loitering, and more. Camera AI algorithms include face detection, human body temperature, safety helmet, and smoke/fire detection. AI performance varies; dual 4K output and NVR AI algorithms are mutually exclusive.

Face Recognition

Supports detection of gender, age, glasses, mask, and body temperature. Up to 300 face libraries and 100,000 base images can be stored.

Storage & RAID

Supports 8 SATA ports, up to 20 TB per HDD. RAID options include JBOD, RAID0/1/5/6/10/50/60. Allows secure, scalable storage for large surveillance deployments.

Interfaces

Includes 1 eSATA, 2 USB2.0, 1 USB3.0, 2 RJ-45, 1 RS-232, 2 RS-485 ports. Supports additional devices, storage, and network integration. Flexible connections for system expansion and peripheral support.

Design and specifications are subject to change without notice. Visit HiFocusCctv.com for the latest product information /specification.

CORE FEATURES

Video and Audio

Channel	80
Incoming Bandwidth	640Mbps
Outgoing Bandwidth	320Mbps
Resolution	16MP/12MP/8MP/6MP/5MP/4MP/3MP/1080P/UXGA/720P/VGA/4CIF/DCIF/2CIF/CIF/QCIF
Preview Decoding Capability	16MP(30fps)×3, 12MP(30fps)×4, 8MP(30fps)×6, 6MP(30fps)×8, 5MP(30fps)×9, 4MP(30fps)×12, 3MP(30fps)×16, 1080P(30fps)×24, 720P(30fps)×48, 4CIF(30fps)×80
Playback Decoding Capability	16MP(30fps)×3, 12MP×4, 8MP(30fps)×6, 6MP(30fps)×8, 5MP(30fps)×9, 4MP(30fps)×12, 3MP(30fps)×16, 1080P(30fps)×16, 720P(30fps)×16
Third Party Camera Access	ONVIF(Profile S/T); RTSP
HDMI Output	HDMI: 800×600(60Hz), 1024×768(60Hz), 1280×720(50Hz/60Hz), 1280×800(60Hz), 1280×1024(60Hz), 1366×768(60Hz), 1440×900(60Hz), 1920×1080(50Hz/60Hz), 2560×1440(30Hz/60Hz), 2560×1600(60Hz), (4K) 3840×2160(30Hz/60Hz)
VGA Output	VGA: 800×600(60Hz), 1024×768(60Hz), 1280×720(50Hz/60Hz), 1280×800(60Hz), 1280×1024(60Hz), 1366×768(60Hz), 1440×900(60Hz), 1920×1080(50Hz/60Hz)
Multi-screen Display	Independent Output: HDMI1/VGA1: 1/2A/2B/3/4/5/6/7/8/9/10/12/13/16/20A/20B/25/32/36/40 HDMI2/VGA2: 1/2A/2B/3/4/5/6/7/8/9/10/12/13/16/20A/20B/25/32/36/40
Audio Input	1CH
Audio Output	1CH
Two-Way Audio	1CH

Compression Standard

Video Compression	Smart H.265+, H.265, Smart H.264+, H.264
Audio Compression	G.711A, G.711U, AAC, ADPCM_DIV4
Stream Type	Video, Video & Audio

Network

Network Protocol	802.1X, ARP, DDNS, DHCP, DNS, Easy DDNS, FTP, HTTP, HTTPS, ICMP, IGMP, IPv4, IPv6, Multicast, NFS, NTP, PPPoE, QoS, RTCP, RTP, RTSP, SMB/CIFS, SMTP, SNMP v1/v2/v3, SRTP, SSH, SSL, TLSv1.2, TCP, UDP, Unicast, UPnP
Moblie Client	Android, iOS
System Compatibility	ONVIF(Profile S/T/G), RTSP, CGI, SDK, P2P
Web	IE10+, Firefox52+, Edge89+, Safari11+, Chrome57+

Recording

Multi-channel Playback	16
Record Mode	Manual Recording, Alarm Recording, Schedule Recording
Storage Method	Local HDD, eSATA
Backup	USB storage device, eSATA, Network
Playback Function	Play/Pause/Stop/Slow/Speed/Backwards 30s/Forwards 30s/Full Screen/Backup (Video Editing)/Step/Digital Zoom

Design and specifications are subject to change without notice. Visit HiFocusCctv.com for the latest product information /specification.

Dual Stream Record	Yes

Alarm

General Alarm	Motion Detection, Mask Alarm, Alarm Input(IPC), Alarm Input (NVR)
Exception Notification	Video Loss, Network Disconnected, No Disk, Illegal Access, Disk group space alert, Disk Full, Disk R/W Error; Recording Abnormal, Abnormal found in smart of disk, Abnormal temperature of the disk, Hotspare Exception, Array Exception, Voltage Alarm(IPC), RTC Failure, IP Address Conflict, MAC Address Conflict
Alarm I/O	16CH IN / 4CH OUT

Intelligent Analytics

AI by Camera	Tripwire, Double Tripwire, Perimeter, Object Abandon, Object Missing, Running, Parking, Heatmap, Loitering, Video Abnormal, Audio Abnormal, License Plate Recognition, On Duty Detection, Crowd Detection, Parking Guard, Safety Helmet Detection, Electric Bicycle Detection, People Counting, Link to Tracking, Smoke and Fire Detection, Environmental Temperature Measurement, Face Detection, Human Body Temperature Measurement, Smart Alarm, Face Recognition, Human/Vehicle Classification
VCA Search	Heatmap; Early-warning Search, Behavior Search, License Plate Search, Safety Helmet Search, Thermographic Retrieval, Duty Search, Electric Bicycle Retrieval, Face Search

Face Detection

Face Attributes	Gender, Age, Glasses, Face Mask, Body Temp

Face Recognition

Face Picture Library	Up to 300 face libraries Up to 100000 base images
Face Picture Comparison	Yes (Cooperate with facial recognition IPC)

Design and specifications are subject to change without notice. Visit HiFocusCctv.com for the latest product information /specification.

Storage

Hard Disk Capacity	8 SATA up to 20 TB capacity for each HDD
RAID	JBOD, RAID0, RAID1, RAID5, RAID6, RAID10, RAID50, RAID60

INTERFACE

eSATA	1×eSATA
USB	2×USB2.0, 1×USB3.0
Network Interface	2×RJ-45, 10/100/1000 Mbps self-adaptive Ethernet port
RS-232	1×RS-232
RS-485	2×RS-485

General

Power Supply	100~240V AC
Power Consumption	≤18W (HDD not included)
NetWeight	6.2Kg
GrossWeight	8.4Kg
Boundary Dimensions	440(L) 455(W) 94(H) mm
Package Dimensions	565(L) 565(W) 220(H)mm
Operating Temperature	-10°C~+55°C (+14°F~+131°F)
Operating Humidity	10%~90%RH (non-condensing)
Storage Temperature	-20°C~+60°C (-4°F~+140°F)

Design and specifications are subject to change without notice. Visit HiFocusCctv.com for the latest product information /specification.
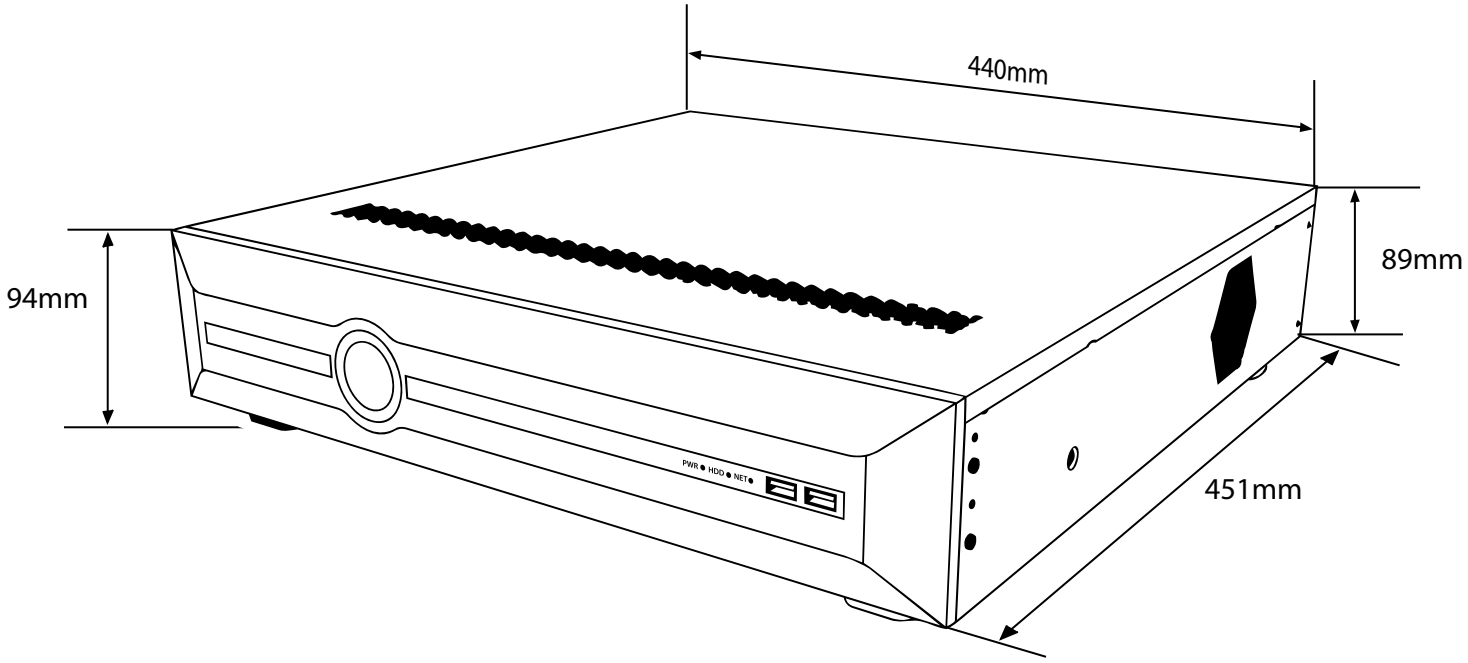
Dimensions