20 CHANNEL NETWORK VIDEO RECORDER

HD-NVR-5220I

- **20 CH NVR –** 160Mbps Incoming / 80Mbps Outgoing Bandwidth
- **Max Resolution –** 16MP/12MP/8MP/6MP/5MP/4MP/3MP/1080P/ UXGA/720P/VGA/4CIF/DCIF/2CIF/CIF/QCIF
- **Compression –** Smart H.265+ / H.265 / H.264+ / H.264
- **Video Output –** HDMI Upto 4K & VGA up to 1080P
- **Multi Display –** 1/2A/2B/3/4/5/6/7/8/9/10/12/13/16/20A/ 20B/20C/20D/25
- **Playback –** 16 CH Simultaneous Playback
- **Storage –** 2× SATA Up to 20TB HDD Capacity
- **AI by Camera –** Tripwire, Double Tripwire, Perimeter, Object Abandon/Missing, Loitering, Face Detection Running, Parking, Crowd Detection etc.

20 CH NVR MULTI RECORDING | 16 MP MAX RESOLUTION | 2 SATA SLOT UPTO 20TB | INCOMING/OUTGOING BANDWIDTH | AI BY CAMERA

SYSTEM OVERVIEW

20 Channel NVR supports up to 16MP ultra high-resolution recording with high bandwidth and smart compression. With HDMI output up to 4K and flexible multi-screen display, it enables efficient monitoring and playback. Supports up to 16-channel playback for smooth video management and performance. Offers wide compatibility with ONVIF, RTSP, P2P, and multiple network protocols for seamless integration. Advanced AI by camera and NVR enables intelligent detection and reliable surveillance performance.

ABOUT HIFOCUS

HI-FOCUS is a trusted leader in surveillance and networking solutions with more than a **Decade of experience** in CCTV Industry. We deliver innovative, reliable, and high-performance security products designed to meet global quality standards. Every HI-FOCUS product is engineered with precision and rigorously tested to ensure superior performance and customer satisfaction.

HI FOCUS
INTEGRATED TRUST

Design and specifications are subject to change without notice. Visit HiFocusCctv.com for the latest product information /specification.

HI-FOCUS®

Design and specifications are subject to change without notice. Visit HiFocusCctv.com for the latest product information /specification.

20 CHANNEL NETWORK VIDEO RECORDER | HD-NVR-5220I

Video and Audio Performance

Supports 20 channels with 160 Mbps incoming and 80 Mbps outgoing bandwidth. Handles up to 16MP resolution with preview and playback decoding at 30fps. Includes 1 audio input, 1 audio output, and 1 two-way audio channel.

Compression and Network Compatibility

Smart H.265+, H.265, Smart H.264, H.264 video compression. Audio compression supports G.711A, G.711U, AAC, and ADPCM_D. Supports IPv4/IPv6, HTTP/HTTPS, FTP, SNMP, and mobile clients on Android/iOS.

Recording and Playback

Supports 16-channel recording with manual, alarm, and scheduled modes. Two SATA HDDs support up to 20TB each with USB/ network backup. Playback includes play, pause, reverse, digital zoom, step, and instant replay.

Alarm and Intelligent Analytics

Provides motion detection, mask alarms, IPC/NVR alarm inputs. Exception notifications for disk, network, or video issues. AI features include tripwire, perimeter, crowd detection, and temperature monitoring.

Face Recognition and VCA Features

Detects gender, age, glasses, face masks, and body temperature. Supports up to 10 face libraries with 20,000 base images. VCA search and reports include heatmaps, people counting, and face statistics.

Storage and Interface

Two SATA ports with up to 20TB per HDD for high capacity storage. External interfaces include 2 USB 2.0 ports and 1 gigabit Ethernet port. Supports local storage,backup, and flexible connection options.

Design and specifications are subject to change without notice. Visit HiFocusCctv.com for the latest product information /specification.

CORE FEATURES

Video and Audio

Channel	20
Incoming Bandwidth	160Mbps
Outgoing Bandwidth	80Mbps
Resolution	16MP/12MP/8MP/6MP/5MP/ 4MP/3MP/1080P/UXGA/720P/ VGA/4CIF/DCIF/2CIF/CIF/ QCIF
Preview Decoding Capability	16MP(30fps)×1,8MP(30fps)×2, 6MP(30fps)×3, 5MP(30fps)×4, 4MP(30fps)×5, 3MP(30fps)×6, 1080P(30fps)×10, 720P(30fps) ×20, 4CIF(30fps)×20 (AI on: 16MP(30fps)×1,8MP(30fps)×2, 6MP(30fps)×2, 5MP(30fps)×3, 4MP(30fps)×4, 3MP(30fps)×5, 1080P(30fps)×8, 720P(30fps) ×16, 4CIF(30fps)×20)
Playback Decoding Capability	16MP(30fps)×1,8MP(30fps)×2, 6MP(30fps)×3, 5MP(30fps)×4, 4MP(30fps)×5, 3MP(30fps)×6, 1080P(30fps)×10, 720P (30fps)×16, 4CIF(30fps)×16 (AI on:16MP(30fps)×1,8MP (30fps)×2, 6MP(30fps)×2, 5MP(30fps)×3, 4MP(30fps)×4, 3MP(30fps)×5, 1080P (30fps)×8, 720P(30fps)×16)
Compatibility	ONVIF(Profile S/T/G), CGI, SDK, P2P
HDMI Output	HDMI: 1024×768(60Hz), (720P) 1280×720(50Hz/60Hz), 1280×800(60Hz), 1280×1024 (60Hz), 1440×900(60Hz), (1080P)1920×1080(50Hz/60Hz), (2K)2560×1440(30Hz), (4K) 3840×2160(30Hz)
VGA Output	VGA: 1024×768(60Hz), (720P) 1280×720(50Hz/60Hz), 1280×800(60Hz), 1280×1024 (60Hz), 1440×900(60Hz), (1080P)1920×1080(50Hz/60Hz)
Multi-screen Display	Simultaneous Output: VGA: 1/2A/2B/3/4/5/6/7/8/9/10/ 12/13/16/20A/20B/20C/20D/25 HDMI: 1/2A/2B/3/4/5/6/7/8/9/ 10/12/13/16/20A/20B/ 20C/20D/25
Audio Input	1CH
Audio Output	1CH
Two-Way Audio	1CH

Compression Standard

Video Compression	Smart H.265+, H.265, Smart H.264, H.264
Audio Compression	G.711A, G.711U, AAC, ADPCM_D
Stream Type	Video, Video & Audio

Network

Network Protocol	802.1X, ARP, DDNS, DHCP, DNS, Easy DDNS, FTP, HTTP, HTTPS, ICMP, IGMP, IPv4, IPv6, Multicast, NFS, NTP, PPPoE, QoS, RTCP, RTP, RTSP, SMB/ CIFS, SMTP, SNMP v1/v2/v3, SRTP, SSH, SSL, TLSv1.2, TCP, UDP, Unicast, UPnP
Moblie Client	Android, iOS
System Compatibility	ONVIF(Profile S/T/G), RTSP, CGI, SDK, P2P
Web	IE10+, Firefox52+, Edge89+, Safari11+, Chrome57+

Recording

Multi-channel Playback	16
Record Mode	Manual Recording, Alarm Recording, Schedule Recording
Storage Method	Local HDD
Backup	USB storage device, Network
Playback Function	Play/Pause/Stop/Reverse/ Slow/Speed/Backwards 30s/ Forwards 30s/Full Screen/ Backup (Video Editing)/ Step/Digital Zoom/ Instant Replay
Dual Stream Record	Supported

Alarm

General Alarm	Motion Detection, Mask Alarm,Alarm Input(IPC), Alarm Input(NVR)

Design and specifications are subject to change without notice. Visit HiFocusCctv.com for the latest product information /specification.

Exception Notification	Video Loss, Network Disconnected, No Disk, Illegal Access, Disk group space alert, Disk Full, Disk R/W Error, Recording Abnormal, Abnormal found in smart of disk, Abnormal temperature of the disk, Hot-spare Exception, Voltage Alarm(IPC), RTC Failure, IP Address Conflict, MAC Address Conflict, Disk Overload
Alarm I/O	4CH IN / 1CH OUT

Intelligent Analytics

AI by Camera	Tripwire, Double Tripwire, Perimeter, Object Abandon, Object Missing, Running, Parking, Heatmap, Loitering, Video Abnormal, Audio Abnormal, On Duty Detection, Crowd Detection, Safety Helmet Detection, Electric Bicycle Detection, People Counting, Link to Tracking, Smoke and Fire Detection, Environmental Temperature Measurement, Face Detection, Human Body Temperature Measurement, Smart Alarm, Face Recognition, Human/Vehicle Classification
AI by NVR	Face Detection, Face Recognition, Tripwire, Double Tripwire, Perimeter, Smart Motion Detection
VCA Search	Early-warning Search, Behavior Search, Safety Helmet Search, Thermographic Retrieval, Duty Search, Electric Bicycle Retrieval, Face Search(Search by face attributes), Smart Motion Detection
VCA Report	Heatmap, People Counting, Face Statistics

Face Recognition

Face Attributes Detection	Gender, Age, Glasses, Face Mask
Face Attributes Search	Gender, Age, Glasses, Face Mask, Body Temperature
Face Recognition Performance	1-ch(Max.5MP) video streams or 4-ch image streams
Face Picture Library	Up to 10 face libraries, up to 20000 base images
Face Picture Comparison	Yes

AI Performance(AI by NVR)

Perimeter/Tripwire Performance	4-ch
Object Abandon/Missing Performance	4-ch

Design and specifications are subject to change without notice. Visit HiFocusCctv.com for the latest product information /specification.

Storage

Hard Disk Capacity	2 SATA upto 20TB HDD

INTERFACE

USB	2×USB2.0
Network Interface	1×RJ-45, 10/100/1000 Mbps self-adaptive Ethernet port

General

Power Supply	DC12V
Power Consumption	<10W (HDD not included)
NetWeight	1.6 kg
GrossWeight	2.8kg
Boundary Dimensions	341(L)280(W)47(H)mm
Package Dimensions	415(L)140(W)375(H)mm
Operating Temperature	-10°C~+55°C (+14°F~+131°F)
Operating Humidity	10%~90%RH (non-condensing)
Storage Temperature	-20°C~+60°C (-4°F~+140°F)

Design and specifications are subject to change without notice. Visit HiFocusCctv.com for the latest product information /specification.
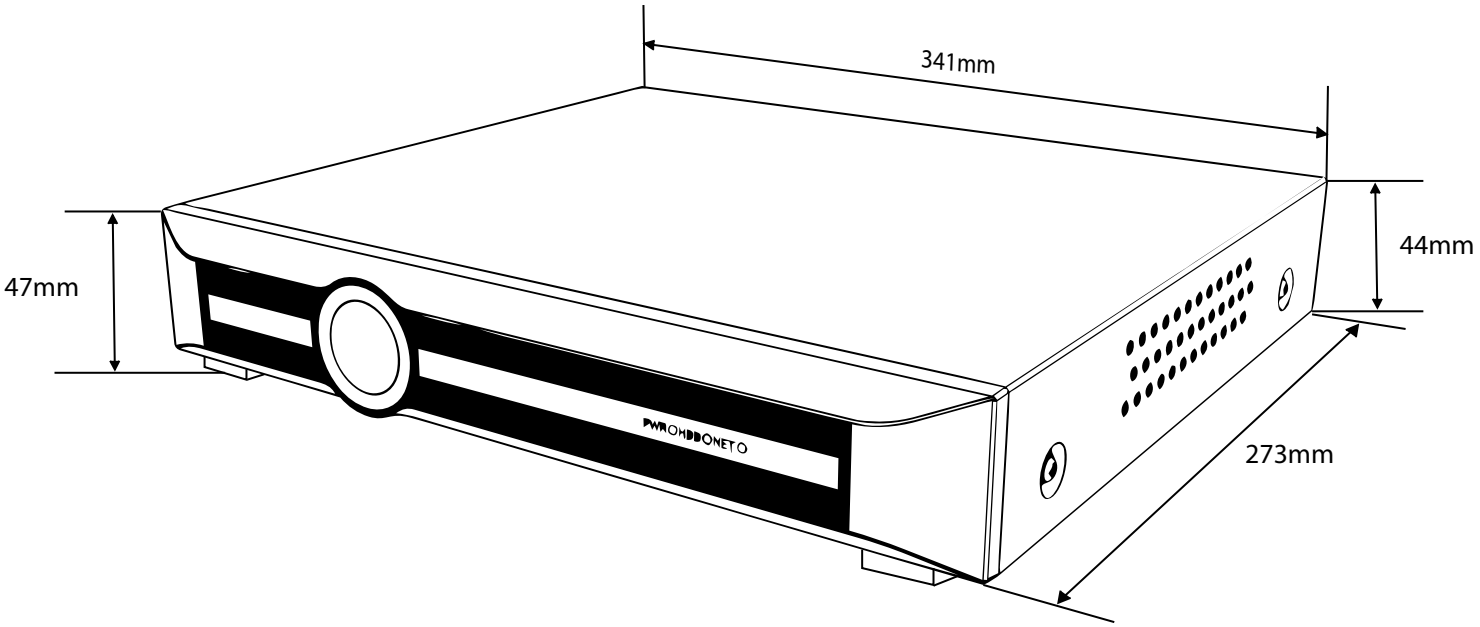
Dimensions