5MP VANDAL BULLET MVF NETWORK CAMERA

HC-IPC-TI4315DVZK-N8-O

- **5MP Full HD Resolution** – Delivers sharp 2592x1944 video at 30fps
- **Infrared Night Vision** – Clear visibility up to 80 meters in total darkness
- **Lens** – Motorized Varifocal Lens, 2.7-13.5mm / 5-50mm lens (Optional)
- **Built-in Microphone** – Capture real-time audio directly from the scene
- **Smart AI Detection** – Supports human and vehicle classification
- **Face Capture Mode** – For entry logging, identity verification, or access control
- **Edge Storage** – MicroSD/MicroSDHC/MicroSDXC supports, up to 512GB
- **IP67 Weatherproof** – Fully protected against dust and heavy rain
- **IK10 Vandal Resistance** – Ideal for public or high-risk areas

1/2.7" STARVIS SONY IMAGE SENSOR

5 MEGAPIXEL

BUILT IN MIC

TWO WAY AUDIO

SUPPORTS SD CARD UP TO 512GB

IP67 IK10

SYSTEM OVERVIEW

Built with a rugged, vandal-resistant housing, it ensures durability and long-term performance. Ideal for commercial buildings, retail spaces, offices, and public areas, it offers a reliable and secure surveillance solution tailored for modern security needs

WHAT IS HIT TECHNOLOGY ?

HIT (HI-FOCUS Integrated Trust) is a next-generation security framework that strengthens surveillance systems with advanced cyber security and intelligent design. By integrating encrypted data transmission, secure device authentication, and protected remote access, HIT ensures surveillance systems remain secure, reliable, and trusted.

ABOUT HIFOCUS

HI-FOCUS is a trusted leader in surveillance and networking solutions with more than a **Decade of experience** in CCTV Industry. We deliver innovative, reliable, and high-performance security products designed to meet global quality standards. Every HI-FOCUS product is engineered with precision and rigorously tested to ensure superior performance and customer satisfaction.

HI FOCUS
INTEGRATED TRUST

Design and specifications are subject to change without notice. Visit HiFocusCctv.com for the latest product information /specification.

HI-FOCUS®

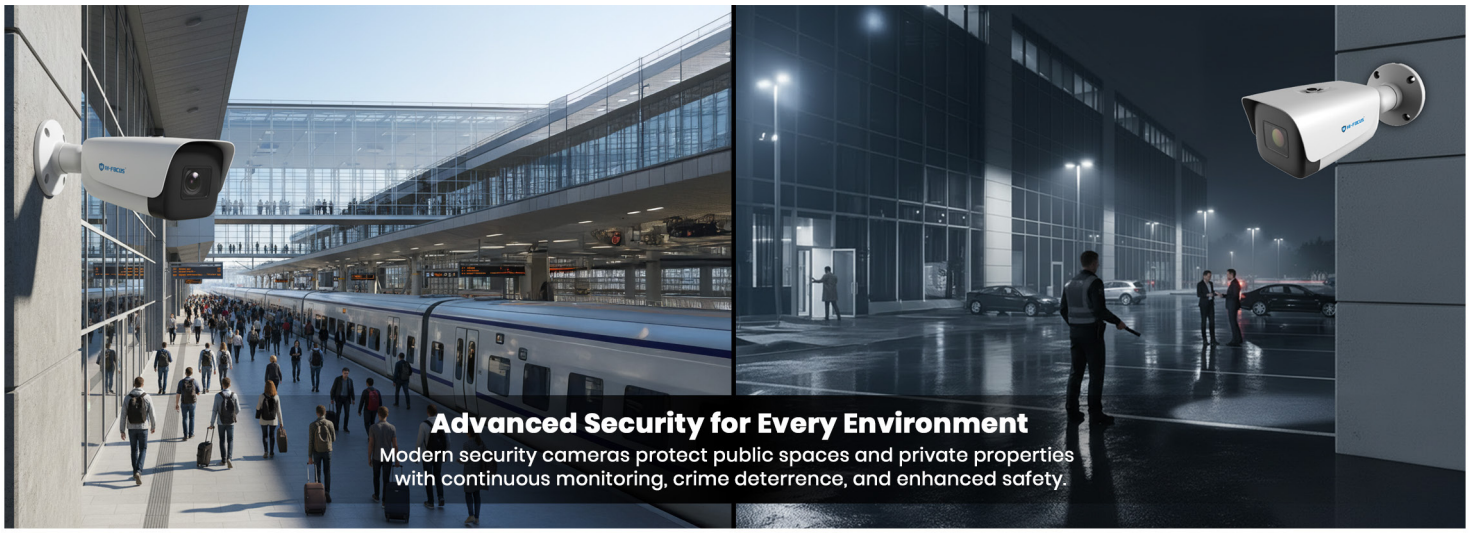

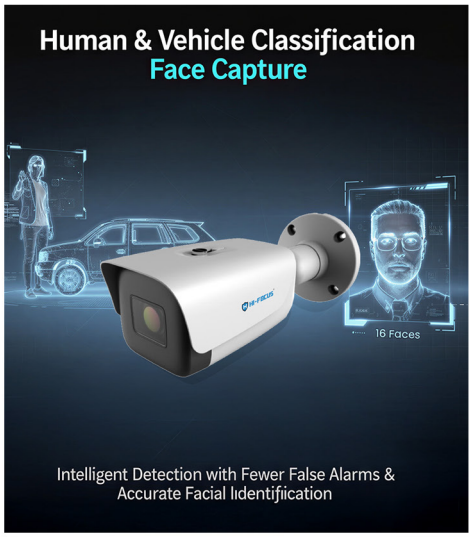

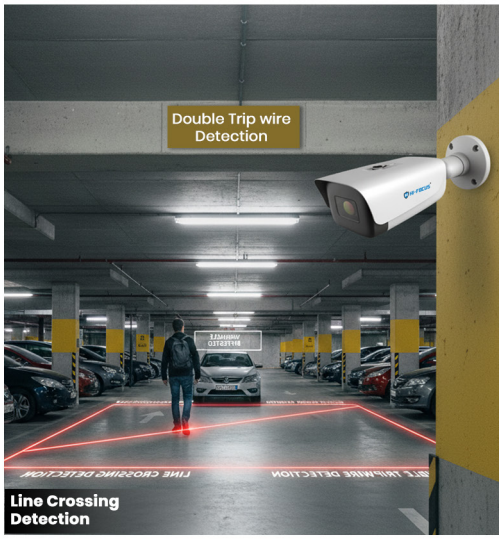

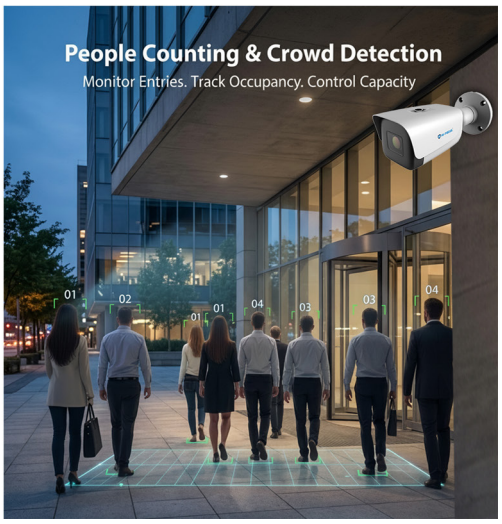

Design and specifications are subject to change without notice. Visit HiFocusCctv.com for the latest product information /specification.

5MP VANDAL BULLET MVF NETWORK CAMERA | HC-IPC-TI4315DVZK-N8-O

Quad Stream

Enabling the transmission of four independent video streams simultaneously. Each stream can be configured with different resolutions, frame rates, and bitrates to optimize bandwidth usage and performance based on application requirements

OSD Configuration Menu

The intuitive OSD menu enables quick, precise control of image and detection settings for optimal performance in any environment.

Two-Way Audio

Built-in two-way audio enables real-time communication through the camera, allowing users to listen and speak remotely for instant response, guidance, or deterrence.

Alarm Integration

Equipped with Alarm Input and Alarm Output ports for seamless integration with external security and monitoring systems. Benefits of Automated threat notification and Reduced manual monitoring

Advanced AI Features

Human & Vehicle Classification – Smart detection with fewer false alarms
Tripwire & Double Tripwire – Detect directional line crossing
Object Abandon & Object Lost – Identify unattended or missing objects
Heatmap Analysis – Track activity density patterns
Loitering & Running Detection – Spot unusual behavior instantly
Parking Detection – Monitor unauthorized parking activity
People Counting & Crowd Detection – Measure footfall and crowd levels
Safety Helmet Detection – Ensure workplace safety compliance
Face Capture – Capture faces for identification and records

Design and specifications are subject to change without notice. Visit HiFocusCctv.com for the latest product information /specification.

CORE FEATURES

CAMERA

Image Sensor	1/2.7"Progressive Scan CMOS Starvis Sony Image Sensor
Minimum illumination	Color: 0.002Lux@ (F1.6, AGC ON), B/W: 0Lux with IR
Shutter Speed	1s-1/100000s
Day&Night	IR-cut filter with auto switch (ICR)
Smart IR	upto 80m
Wave length	850nm
WDR	120dB
S/N	>56dB
Focal Length	2.7-13.5mm / 5-50mm lens (Optional)
Aperture Range	F1.6, Fixed
Iris	Automatic Iris Control
Aperture Type	Motorized
Field of View	98.3°-32.2°
Optical Zoom	5x
DORI Distance	Detect:56m~240m Observe:22m~95m Recognize:11m~48m Identify:5.6m~24m
Digital Zoom	16x

VIDEO

Video Compression	Smart H.265/ H.265/H.264B/H.264M/ H.264H/Motion JPEG
Video Streaming Bit Rate	VBR/CBR
Video Bit Rate	32k-16Mbps
Audio Compression	G.711A/G.711U/ADPCM_D/AAC_LC
Audio Sampling Rate	8kHz/32kHz/48kHz
Max. Resolution	2592x1944 @ 30fps
Main Stream	PAL 25Fps: 5MP (2592x1944), 4MP (2592x1520), 1440P (2560x1440), 3MP (2304x1296), 50 Fps: 1080P (1920x1080) ,720P (1280x720) NTSC 30Fps: 5MP (2592x1944), 4MP (2592x1520), 1440P (2560x1440), 3MP (2304x1296), 60 Fps: 1080P (1920x1080),720P (1280x720)
Sub Stream	PAL 25Fps: 1080P (1920x1080), 720P (1280x720), 4CIF(704x576) NTSC 30Fps: 1080P (1920x1080), 720P (1280x720), 4CIF(704x576)
Third Stream	PAL 25Fps: 1080P (1920x1080), 720P (1280x720), 4CIF(704x576) NTSC 30Fps: 1080P (1920x1080), 720P (1280x720), 4CIF(704x576)
Fourth Stream	PAL 25Fps: 4CIF (704x576), 2CIF (704x288), 640x360, CIF (352x288) NTSC 30Fps: 4CIF (704x576), 2CIF (704x288), 640x360, CIF (352x288)
BLC	Supported
HLC	Supported
AGC	Supported
3DNR	Supported
White Balance	Auto/Semi-auto/Manual/Sunny/ Natural light/Warm light/Sodium lamp/Incandescent lamp/Locked white balance
Image settings	Anti-Flicker, Brightness, Contrast, Sharpness, Saturation, Mirror, Image Flip
ROI	8 regions
OSD	5 regions; 16x16/32x32/48x48/64x64 96x96
Defog	Supported
Privacy Mask	4 regions

INTELLIGENT ANALYSIS

Basic Event	Human/Vehicle Classification, Tripwire, Double Tripwire, Perimeter, Motion Detection, Tampering Detection Object Abandon, Object Lost, Heatmap, Loitering, Running, Parking,Video Abnormal, Audio Abnormal, People Counting, Crowd, Safety Helmet Detection, On Duty Detection, Video Abnormal, Audio Abnormal
Face Recognize	Detect up to 32 faces at the same scene; Capture up to 16 faces at the same scene
Smart Detection	Human & vehicle classification plus face capture for smarter alerts

SECURITY

Cyber Security	AES 256-bit Encryption, Configuration encryption, trusted execution, Digest, security logs, secure boot, digitally signed firmware, secure firmware upgrade, configurable password policy, user authentication account lockout, video encryption, IP/MAC filtering, HTTPS, trusted upgrade, trusted boot

Design and specifications are subject to change without notice. Visit HiFocusCctv.com for the latest product information /specification.

INTERFACE

Network Interface	1 RJ45 10M/100M Base-TX Self Adaptive Ethernet Port
Audio	1channel in, 1channel out
Built-in Mic	Supported
Alarm	2channel in, 3mA, 3.3VDC, 1channel out, 1A, 24VDC
Reset Button	Supported (built-in)
On-Board Storage	Built-in Micro SD card slot, up to 512 GB
Additional Interfaces	RS-485

NETWORK

ANR	Yes
Protocols	HTTP, HTTPS, TCP/IP, UDP, UPnP, ICMP, IGMP, SNMP, DHCP, DNS, DDNS, EasyDDNS, NTP, SMTP, SSL, 802.1X, QoS, IPv4, IPv6, PPPOE, Unicast, Multicast, ARP, RTP, SRTP, RTSP, FTP, NAS
System Compatibility	ONVIF Profile (S,T,G,M) SDK, CGI, Milestone, RTMP
Remote Connection	≤7
Client	HF Prime VMS

GENERAL

Operating Temperature	-40°C~65°C(-40°F~149°F)
Operating Humidity	≤95%RH
Storage Temperature	-40°C~65°C(-40°F~149°F)
Storage Humidity	10%~95%RH(non-condensing)
Power Supply	DC12V±25%, MAX 9.5W; POE 802.3at, MAX 10.5W
Ingress Protection	Surge protection 4000V, ESD6000V, IP67
Vandal Resistance	IK10
Certification	MTBF Certificate from STQC, EMI/EMC, ISO9001, CE, FCC and RoHS, BIS, STQC approved compliance report, REACH, ESD 4KV, BIS-ER-01, BIS-IS-13252
Boundary Dimensions	265(L)105(W)105(H)mm
Package Dimensions	360(L)150(W)170(H)mm
Gross Weight	1.6kg

Design and specifications are subject to change without notice. Visit HiFocusCctv.com for the latest product information /specification.

Dimensions

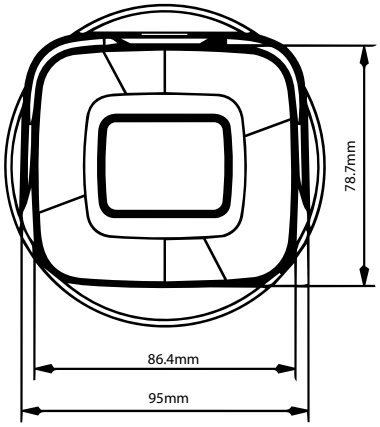
78.7mm
86.4mm
95mm

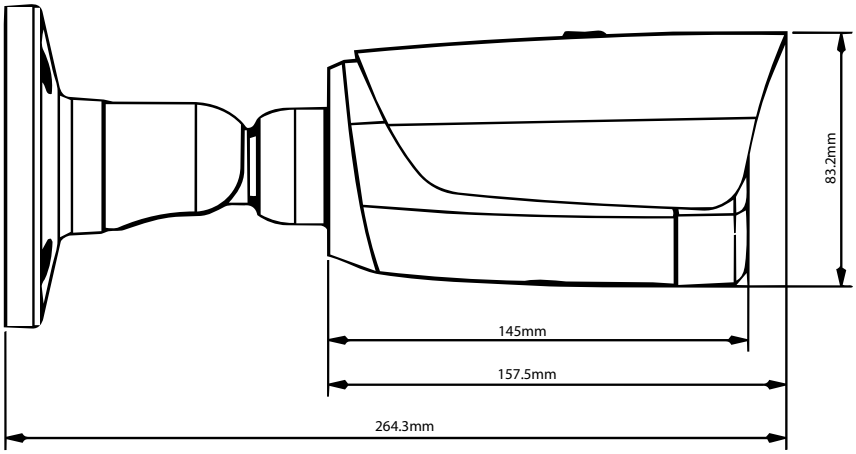
83.2mm
145mm
157.5mm
264.3mm

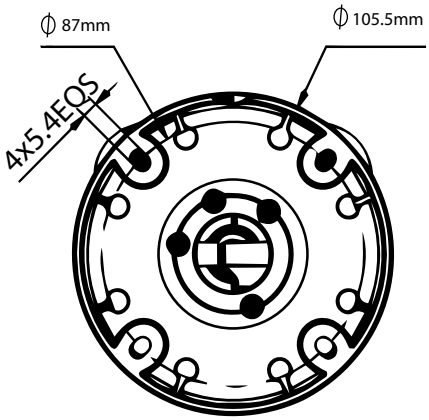
Φ 87mm
Φ 105.5mm
4x5.4EQS